TECHNICAL MANUAL

SERIES PS940B

MINI-PORTABLE OSCILLOSCOPES

April, 1978

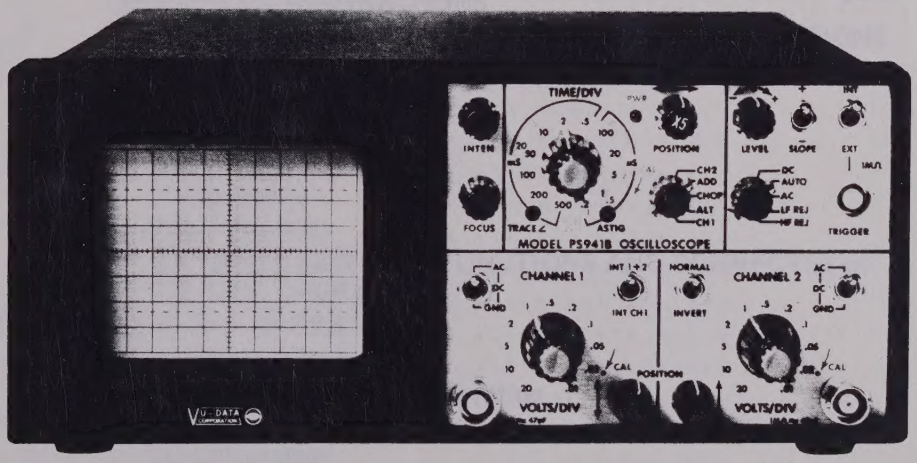

Vu-data Corporation
7170 Convoy Court
San Diego, California 92111
Phone: (714) 279-6572
TWX: 910-335-1586
Cable: VUDATA SANDIEGO

LIST OF EFFECTIVE PAGES

TOTAL NUMBER OF PAGES IS 138 AS FOLLOWS:

Page No.	Issue
Title	Original
A	Original
i through vi	Original
1-1 through 1-12	Original
2-1 through 2-4	Original
3-1 through 3-16	Original
4-1 through 4-18	Original
5-1 through 5-34	Original
6-1 through 6-32	Original
7-1 through 7-14	Original

TABLE OF CONTENTS

Section	Para.	Title	Page
I		GENERAL DESCRIPTION	1-1
	1-1	INTRODUCTION	1-3
	1-5	INSTRUMENT DEFINITION	1-3
	1-11	APPLICATION	1-4
	1-13	PHYSICAL DESCRIPTION	1-4
	1-20	SPECIFICATIONS	1-8
	1-21	ACCESSORIES	1-9
	1-24	ORDERING INFORMATION	1-10
II		INSTALLATION	2-1/2-2
	2-1	INSPECTION UPON RECEIPT	2-3
	2-2	BATTERY OPERATION	2-3
III		OPERATION	3-1/3-2
	3-1	OPERATING INSTRUCTIONS	3-3
	3-2	FRONT PANEL CONTROL FUNCTIONS AND CONNECTIONS	3-3
	3-3	Channel 1 Vertical Section	3-3
	3-4	Channel 2 Vertical Section	3-3
	3-5	Trigger Section	3-4
	3-6	Sweep Section	3-6
	3-7	CRT Controls	3-6
	3-8	PS943 Controls	3-8
	3-9	REAR PANEL CONTROL FUNCTIONS AND CONNECTIONS	3-8
	3-10	FIRST TIME OPERATION	3-8
	3-11	GENERAL OPERATION	3-10
	3-12	Input Signal Probes	3-11
	3-13	Channel 1 or Channel 2 Operation	3-11
	3-14	Alternate Trace Operation	3-11
	3-15	Chop Operation	3-13
	3-16	Add Operation	3-13
	3-17	Triggering	3-13
	3-18	Sweep Control	3-14
	3-19	CRT Control	3-14
	3-20	Sweep Magnifier Control	3-14
	3-21	X-Y Operation (Model PS943 ONLY)	3-14
IV		THEORY OF OPERATION	4-1/4-2
	4-1	GENERAL	4-3
	4-2	VERTICAL INPUT BOARD	4-3
	4-3	Detailed Description	4-4

TABLE OF CONTENTS (Continued)

Section	Para.	Title	Page
	4-4	VERTICAL OUTPUT BOARD	4-7
	4-5	Detailed Description	4-7
	4-6	HORIZONTAL Board	4-8
	4-7	Detailed Description	4-9
	4-8	POWER SUPPLY ASSEMBLY	4-13
	4-9	Detailed Operation	4-13
	4-10	MASTER BOARD	4-13
	4-11	Sweep Magnifier Operation	4-15/16
	4-12	X-Y Operation (Model PS943 ONLY)	4-15/16
V		MAINTENANCE	5-1/5-2
	5-1	GENERAL	5-3
	5-2	PREVENTIVE MAINTENANCE	5-3
	5-3	Cleaning	5-3
	5-4	Inspection	5-3
	5-5	Tightening	5-4
	5-6	Recalibration	5-4
	5-7	TROUBLESHOOTING	5-4
	5-8	Troubleshooting Precautions	5-4
	5-9	Parts Identification	5-5
	5-10	Resistor Identification	5-5
	5-11	Capacitor Identification	5-6
	5-12	Diode Marking	5-6
	5-13	Transistor Identification	5-6
	5-14	Integrated Circuit Identification	5-8
	5-15	Soldering Precautions	5-9
	5-16	Troubleshooting Techniques	5-9
	5-17	Circuit Board Troubleshooting	5-10
	5-18	CORRECTIVE MAINTENANCE	5-10
	5-19	CALIBRATION	5-18
	5-20	Test Equipment Required	5-18
	5-21	Location of Alignment Adjustments	5-18
	5-22	Initial Control Settings	5-19
	5-23	Power Supply Calibration	5-19
	5-24	Vertical Output Amp Calibration	5-20
	5-25	Vertical Calibration	5-20
	5-26	Horizontal Calibration	5-21
	5-27	PS941 Slow Sweep Calibration	5-21
	5-28	Trigger Balance Calibration	5-21
	5-29	PS943 X-Y Calibration	5-22
	5-30	Probe Calibrator Adjustment	5-22
VI		PARTS LIST	6-1
VI		MANUFACTURERS CODE	6-2
VII		DRAWINGS	7-1/7-2

LIST OF ILLUSTRATIONS

Section	Figure No.	Title	Page
1	1-1	Series PS940 Mini-Portable Oscilloscope	1-2
	1-2	Rear Panel View of Series PS940 Unit	1-5
	1-3	Rear Panel View of Series PS940 Unit with Battery Pack Option Installed	1-5
	1-4	Sub-Assemblies Comprising Each Series PS940 Unit	1-6
	1-5	Series PS940 Rack Mounting Configuration	1-7
	1-6	Dimensional Outline Drawing	1-11/1-12
III	3-1	Series PS940 Operating Controls	3-5
	3-2	Rear Panel View of Series PS940	3-7
	3-3	Compensated Waveform	3-12
IV	4-1	Chopper Connections	4-3
	4-2	Input Attenuator and Post Attenuator	4-5
	4-3	Chopper Circuit	4-6
	4-4	Delay Line Connections	4-7
	4-5	Sweep Generator	4-8
	4-6	TTL Logic Elements – 7451	4-10
	4-7	TTL Logic Elements – 74L122	4-11
	4-8	TTL Logic Elements – 7476	4-12
	4-9	Block Diagram	4-17/4-18
V	5-1	Vertical Input Board Adjustment Locations	5-11
	5-2	Vertical Output Board Adjustment Locations	5-12
	5-3	Horizontal Board Adjustment Locations (Model PS941)	5-13
	5-4	Horizontal Board Adjustment Locations (Model PS943)	5-14
	5-5	Power Supply Board Adjustment Locations	5-15
	5-6	Master Board Adjustment Location	5-16
	5-7	Vertical Switch Adjustment Locations	5-17
	5-8	Parts Location for Vertical Input Board Sub-Assembly	5-23/5-24
	5-9	Parts Location for Vertical Output Board Sub-Assembly	5-25/5-26
	5-10	Parts Location for Horizontal Board Sub-Assembly (Model PS941)	5-27/5-28
	5-11	Parts Location for Horizontal Board Sub-Assembly (Model PS943)	5-29/5-30
	5-12	Parts Location for Power Supply Board Sub-Assembly	5-31/5-32
	5-13	Parts Location for Master Board Sub-Assembly	5-33/5-34
VII	7-1	Horizontal Assembly Schematic 9401062	7-3/7-4
	7-2	Vertical Assembly Schematic 9401024	7-7/7-8
	7-3	Power Supply Assembly Schematic 9401028	7-9/7-10
	7-4	Vertical Output Schematic 9401031	7-11/7-12
	7-5	Master Board Schematic 9401030	7-13/7-14

LIST OF TABLES

Section	Table No.	Title	Page
IV	4-1	Vertical Attenuation Relationships	4-4
	4-2	SN7451 Truth Table	4-10
V	5-1	Dipped Tantalum Capacitor Marking	5-6
	5-2	Transistor Lead Identification	5-7
	5-3	IC Lead Identification	5-8
VI	6-1	Series PS940 Assemblies	6-3
	6-2	Parts List (PS941 Final Assembly 9405058)	6-4
	6-3	Parts List (PS943 Final Assembly 9405068)	6-5
	6-4	Parts List (Vertical Module Assembly 9405020)	6-6
	6-5	Parts List (Vertical Switch Sub-Assembly 9405021)	6-7
	6-6	Parts List (Vertical Front Panel Sub-Assembly 9405022)	6-8
	6-7	Parts List (Vertical Input Board Sub-Assembly 9405024)	6-9
	6-8	Parts List (Horizontal Module Assembly 9405061)	6-14
	6-9	Parts List (Horizontal Front Panel Sub-Assembly 9405059)	6-15
	6-10	Parts List (Horizontal Board Sub-Assembly 9405062)	6-16
	6-11	Parts List (Power Supply Assembly 9405027)	6-23
	6-12	Parts List (Power Supply Board Sub-Assembly 9405028)	6-24
	6-13	Parts List (Display Assembly 9405029)	6-28
	6-14	Parts List (Master Board Sub-Assembly 9405030)	6-29
	6-15	Parts List (Vertical Output Board Sub-Assembly 9405031)	6-30

SECTION I

GENERAL DESCRIPTION

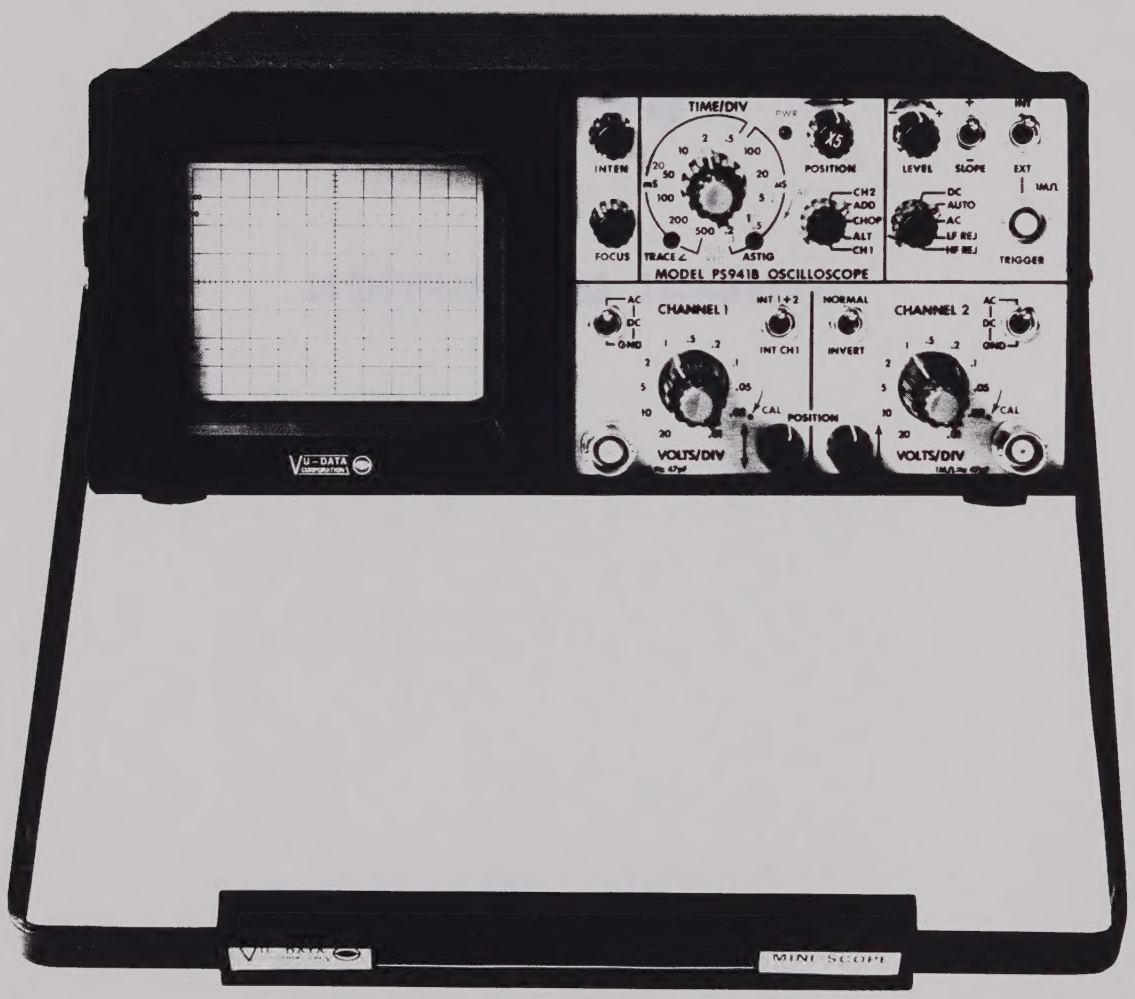

Figure 1-1. Series PS940 Mini-Portable Oscilloscope

1-1. INTRODUCTION

1-2. This manual contains complete operation, calibration and maintenance instructions for the Series PS940 Mini-Portable Oscilloscopes. See Figure 1-1.

1-3. The purpose of this manual is to provide the operation, calibration and maintenance information required by the equipment operator or service technician. The manual does not include information pertaining to special equipment applications, nor does it include instructions for accomplishing repairs of the type performed at the factory.

1-4. The manual is divided into seven sections. Section I provides general information regarding the purpose of the equipment, its physical arrangement, and its pertinent specifications. Section II contains information on installation and unpacking. Section III contains instructions for operating the equipment. Section IV describes the theory of operation of the equipment, circuits and mechanisms. Section V provides test, alignment, and maintenance procedures. Section VI contains a complete parts list. Section VII contains complete circuit drawings.

WARNING

When performing the power supply alignment, the instrument may be operating with the covers removed. High voltages, which could be lethal, are accessible and extreme caution should be taken. Only screwdrivers with insulated shafts should be used for setting the adjustments. The covers should be removed only for the duration of time to make the alignments. The power should be off while the covers are being removed or installed.

1-5. INSTRUMENT DEFINITION

1-6. The Series PS940 units are classified as mini-portable oscilloscopes, or "mini-scopes," and as such serve as useful high frequency, visual trouble-shooting tools. They include all the basic vertical, horizontal, trigger and display features of laboratory oscilloscopes, yet they are packaged in a form which makes them ideal for use in mobile and field service applications. By definition, "mini-scope" implies a size small enough to fit into a tool kit or brief case, a weight of 15 pounds or less, and self-contained battery operation.

1-7. The Series PS940 is comprised of two models as listed below:

Model	Description
PS941	Basic unit.
PS943	Same as basic unit plus X-axis input capability.

1-8. As the specifications in paragraph 1-20 indicate, each Series PS940 unit is a DC-20 MHz bandwidth, 10 mV/div sensitivity, dual-trace, triggered sweep oscilloscope. A delay line is included to facilitate viewing the leading edge of pulses and other fast rise time phenomena. Rise time is 17.5 nsec. Chopped and alternate sweep features are provided, including Channel 1 only and Channel 2 only, as well as add and invert mode functions. Twenty-one sweep ranges from 500 msec/div to 100 nsec/div are included. Internal or external triggering is provided, including automatic and manual DC or AC coupled level control; high and low frequency reject capacility is also included. The unit can be triggered from Channel 1 only, or alternately from Channel 1 and Channel 2.

1-9. Aside from the above mentioned front panel controls, the rear panel includes the following features: switch for power on/off or battery charging; ground lug; pulse waveform output for self test, calibration and 10:1 probe compensation; AC power line fuse holder; and external DC source/battery pack operation (battery recharging circuitry is included within the basic unit). The AC input connector is positioned on the right rear side panel.

1-10. Standard accessories which accompany each unit at time of shipment include detachable AC power line cord, one each technical manual, carrying handle/stand, and front panel protective hood. See paragraph 1-25 for a complete listing of optional accessories.

1-11. APPLICATION

1-12. The Series PS940 units bring laboratory quality to "on-site" oscilloscope test and measurement applications. They are high performance, visual trouble-shooting tools intended for use in analog or digital circuit analysis over a DC to 20 MHz frequency range. Because of their small size, light weight and battery operation capability, they are especially convenient for in-plant mobile applications or field service work where these features are paramount to achieving the task at hand. Their vertical sensitivity, sweep rates, bandwidth and dual-trace with delay line features make them ideal for use in analog circuit applications down to the component level and digital applications down to the assembly level where a larger, heavier and more sophisticated instrument might formerly have been employed. Triggering and general performance is comparable to laboratory oscilloscopes.

1-13. PHYSICAL DESCRIPTION

1-14. Each Series PS940 unit employs a plug-in assembly concept to facilitate maintenance. The entire unit is comprised of but four assemblies, each of which is self-contained. These include the vertical assembly, horizontal (sweep) assembly, power supply assembly and display assembly; the latter includes the master printed circuit (P/C) board, CRT and CRT driver P/C board. Each of the vertical, horizontal and power supply assemblies plugs into the master P/C board; when in place, they are held mechanically rigid by appropriately positioned machine screws. See Figure 1-4.

1-15. All major circuitry within a PS940 consists of standard, off-the-shelf discrete components and linear integrated circuits of U.S. origin. Silicon semi-conductors and tantalum capacitors are employed to increase reliability. All principal components, voltage levels and test points are identified by reference designators and symbols; all diodes and tantalum capacitors are identified for polarity.

1-16. The front panel controls are divided into four basic groups to facilitate operation. These groups include: (1)vertical, (2)horizontal, (3)trigger and (4)trace. See Section II for a detailed description of all operating controls.

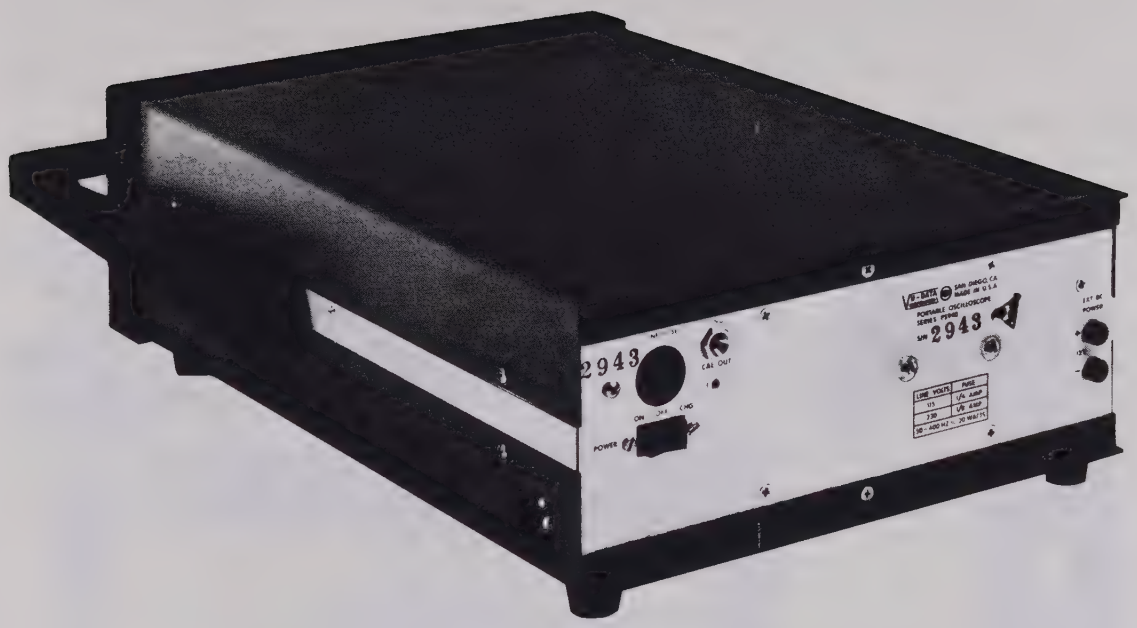

Figure 1-2. Rear Panel View of Series PS940 Unit

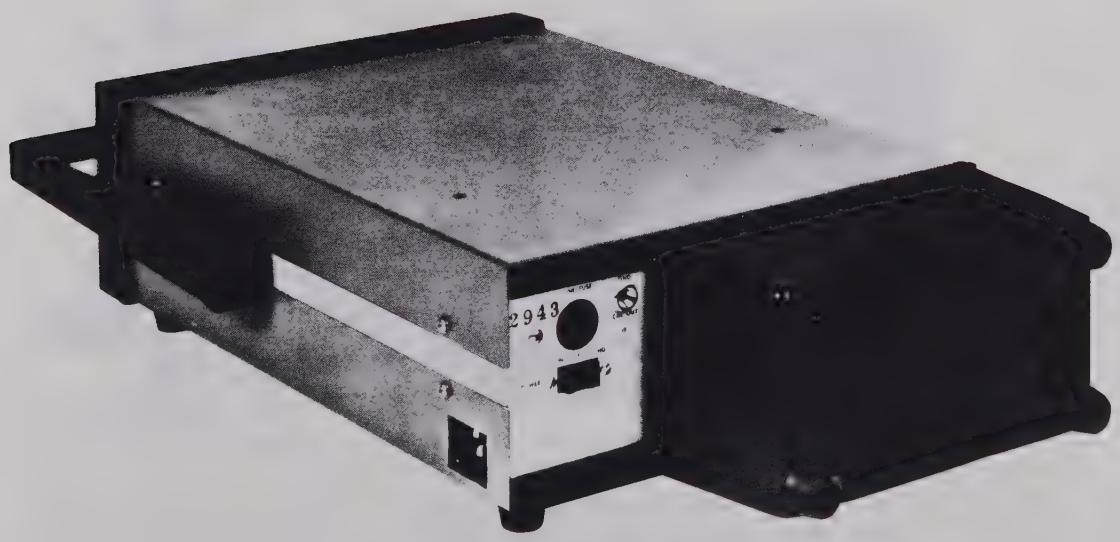

Figure 1-3. Rear Panel View of Series PS940 Unit with Battery Pack Option Installed

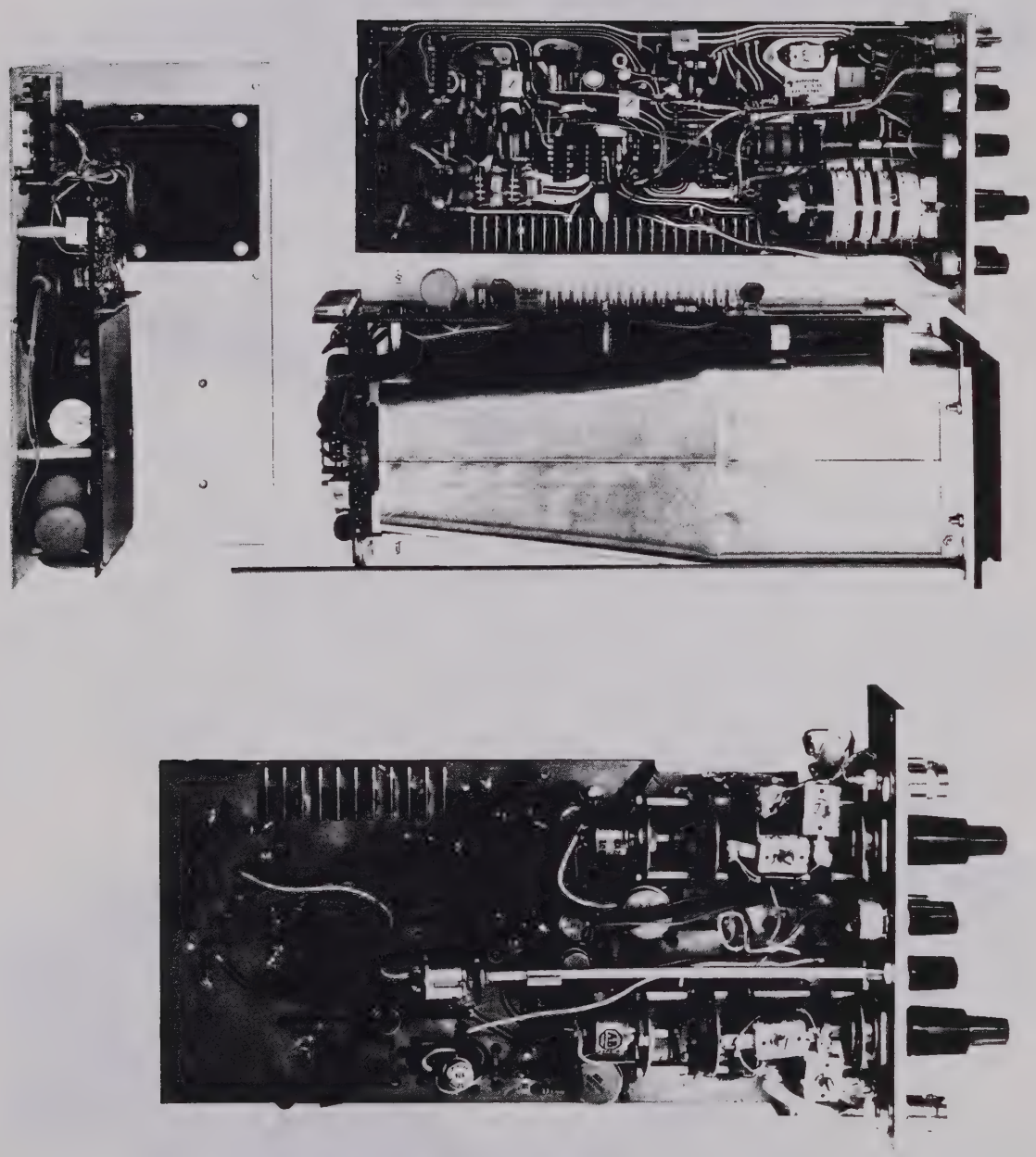

Figure 1-4. Sub-Assemblies Comprising Each Series PS940 Unit

1-17. A fully shielded 5 cm x 7 cm flat faced, rectangular CRT is provided and secured rigidly within the display assembly. The external graticule is black lined and non-illuminated. It includes 10 and 90 percent risetime reference lines within an 8 x 10 major division area. Each ¼ inch major division is divided into 5 minor divisions. Graticule area is 2.0" (vertical) x 2.5" (horizontal).

1-18. The optional battery pack is field installable, and mounts to any PS940 rear panel via two bolts which fit into heavy-duty, pre-positioned mounting inserts. Electrical interface with the unit is accomplished through the external DC source input connectors on the rear panel. The battery pack includes the battery, battery housing, and trim cover. Necessary battery recharging circuitry is contained within the basic PS940.

1-19. All Series PS940 units may be rack or panel mounted by installing the optional rack mount kit. As shown in Figure 1-5, below, the unit is mounted through a 1/8" thick panel opening equal to the height and width dimensions listed in Figure 1-6 by removing the trim strip and securing the two side bars to the panel with 6-32 screws on either side; the trim strip is then re-installed. The PS940 may be mounted to a RETMA rail and/or panel by adding the 1 in. ear(s) provided with the optional rack mount kit.

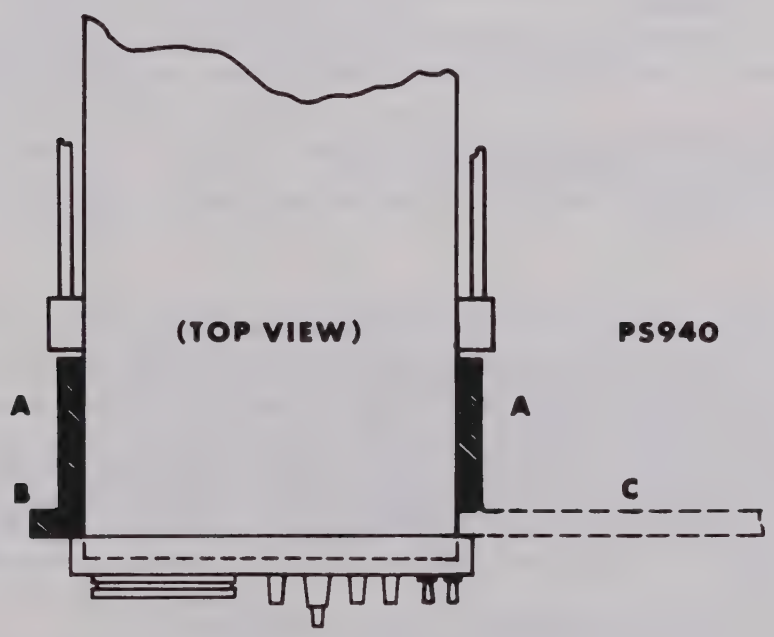

The above diagram shows the optional rack/panel mount kit available with the Series PS940 units. Parts "A" (2 each) and "B" (2 each) are included. The "A" parts are used for panel mounting through a 1/8 or 3/16 inch thick panel opening equal to the height and width dimensions of 3.520 x 8.520. Two 6-32 screws are used on either side to secure the "A" parts, and PS940 to the panel. For rack mounting applications, "B" is used as a 1 inch ear for convenient mounting to the RETMA rail, while "C" is a customer supplied filler panel. The instrument should be supported at the rear when rack mounted.

Figure 1-5. Series PS940 Rack Mounting Configuration

1-20. SPECIFICATIONS

VERTICAL DEFLECTION

BANDWIDTH: DC to greater than 20 MHz within 3 dB.
COUPLING: AC, DC or Ground, selectable. Low frequency limit with AC coupling is less than 2 Hz.
RISE TIME: Less than 18 nsec.
DEFLECTION FACTOR: 10 mV/div to 20 V/div in 11 calibrated ranges, 1-2-5 sequence; all ranges accurate to within 3% with vernier in Calibrate position. Vernier: Continuously variable between ranges; extends maximum deflection factor to approximately 50 V/div.
DISPLAY MODES: Channel 1 only; Channel 2 only (normal or inverted); Alternate; Chopped (approximate 100 KHz rate); Added.
DELAY LINE: Allows leading edge of signal to be displayed.
INPUT R AND C: 1 megohm within 2% paralleled by approximately 47 pF.
MAXIMUM INPUT VOLTAGE: 400 V (DC + peak AC).

HORIZONTAL DEFLECTION

TIME BASE: 100 nsec/div to 500 msec/div in 21 calibrated ranges, 1-2-5 sequence (200 msec/div and 500 msec/div ranges not included for PS943B); all ranges accurate to within 3% F.S. over center 8 divisions and 5% F.S. over 10 divisions, with vernier in Calibrate position. Vernier: Continuously variable between ranges; extends slowest sweep rate to approximately 1.25 sec/div (250 msec/div for PS943B).
X5 MAGNIFIER: Expands sweep rate selected by factor of 5 (extends fastest sweep rate to 20 nsec/div); accurate to within 10% F.S. over center 8 divisions, with vernier in Calibrate position.
EXTERNAL INPUT (PS943B ONLY):
Bandwidth: DC to greater than 50 KHz within 3 db.
Coupling: Deflection Factor; Input R and C; and Maximum Input Voltage: Same as for VERTICAL DEFLECTION.

TRIGGER

MODES: Automatic or manual level; "+" or "−" slope selection; internal or external. Automatic operation eliminates trigger level adjustments and is functional above 40 Hz. With no input, automatic triggering provides a bright baseline at all sweep rates. Internal trigger source: Internal (displayed signals) or Internal Channel 1 signal only.
COUPLING: AC, AC LF REJ & HF REJ and DC for internal and external triggering.
AMPLITUDE REQUIREMENTS: 0.4 div deflection (internal) or 150 mV external to 2 MHz, increasing to 1.3 div deflection (internal) or 300 mV external to 20 MHz. Requirements increase below 60 Hz with AC coupling, below 1 KHz with AC LF REJ coupling, and above 50 KHz with AC HF REJ coupling.
EXTERNAL INPUT R & C: Approximately 1 megohm paralleled by 47 pf.
MAXIMUM INPUT VOLTAGE: 200V (DC + peak AC).

DISPLAY

CRT: Flat-faced rectangular with 8 x 10 div display area; each div is 1/4-inch. CRT uses low-power filament to enhance battery operation. P31 phosphor normally supplied.
GRATICULE: Black; vertical and horizontal centerlines marked in 5 minor divisions per major 1/4-inch division. 10 and 90 percent reference lines included.

ENVIRONMENTAL

AMBIENT TEMPERATURE: Operating: 0°C to $+55^{o}$C. Non-operating: -55°C to $+75^{o}$C without

batteries; –40°C to +60°C with batteries. Charging: +5°C to +40°C.
ALTITUDE: Operating: 15,000 feet maximum. Non-operating: 50,000 feet.
SHOCK AND VIBRATION: Will withstand the shock and vibration conditions encountered in normal commercial shipping and handling.
HUMIDITY: Will operate up to 95% relative humidity, non-condensing.

GENERAL
PROBE COMPENSATOR/AMPLITUDE CALIBRATOR: 1V p-p, accurate to within 2%, approximate 1 KHz pulse waveform at external jack on rear panel. Output impedance approximately 10 Kohms.
PROBES: Standard oscilloscope probes can be employed. Switchable 10:1/1:1 probe kit available (Option PS9008).
POWER SOURCES:

Self-contained DC source: Chassis includes provision to accept rear panel mounted optional battery pack (Option PS9010) which provides up to 3 hours of operating time; recharging circuitry is included within chassis. Internal recharging circuit includes protection techniques so that batteries cannot be overcharged.

External DC source: Rear panel mounted jack allows unit to be operated from external DC source of 10V to 16V; approximately 12 watts.

External AC source: Operates from an external AC source of 105V to 125V, or 207V to 253V (selected by rear panel slide switch); 50 to 400 Hz; approximately 20 watts.

DIMENSIONS AND WEIGHTS (APPROXIMATE):

Height:	3-1/2" (8.90 cm)
Width:	8-1/2" (21.59 cm)
Depth:	12" (30.48 cm); add 3" (7.62 cm) for battery pack.
Weight:	9.5 pounds (4.3 kg); add 3.5 pounds (1.6 kg) for batteries; add 5 pounds (2.3 kg) for shipping.

1-21. ACCESSORIES

1-22. Standard accessories included with each unit at time of shipment are listed in paragraph 1-10.

1-23. The Series PS940 "Mini-Scopes" include a variety of optional accessories which are available to the user to assist his application where required. These include a switchable 10:1/1:1 probe kit, battery pack, viewing hood for display enhancement under high ambient light conditions, rack mount kit, extender card, accessory pouch which secures to the top cover, and P-7 phosphor for use with low frequency phenomena. Refer to paragraph 1-25 for a detailed listing of these optional accessories.

1-24. ORDERING INFORMATION

1-25. A tabulation of both Series PS940 models and optional accessories follows. Consult the Vu-data Corporation factory directly or your local Vu-data sales office for current price and delivery information.

Model PS941 Mini-Portable Oscilloscope

Model PS943 Mini-Portable Oscilloscope:
Adds X-axis input capability to basic PS941.

Option PS9008 Switchable 10:1/1:1 Probe Kit

Option PS9010 Battery Pack: Secures to rear panel and is field installable.

Option PS9011 Viewing Hood: Secures to CRT bezel to shield display from high ambient light conditions.

Option PS9012 Rack Mount Kit: Includes mounting bars for panel mount as well as 1 inch ears for mounting to RETMA rail and/or panel.

Option PS9013 Extender Card: Facilitates servicing of plug-in assemblies.

Option PS9115 Accessory Storage Pouch: Secures to top cover.

Option PS9017 P-7 Phosphor: Substituted in place of P-31 phosphor; enhances display of low frequency phenomena.

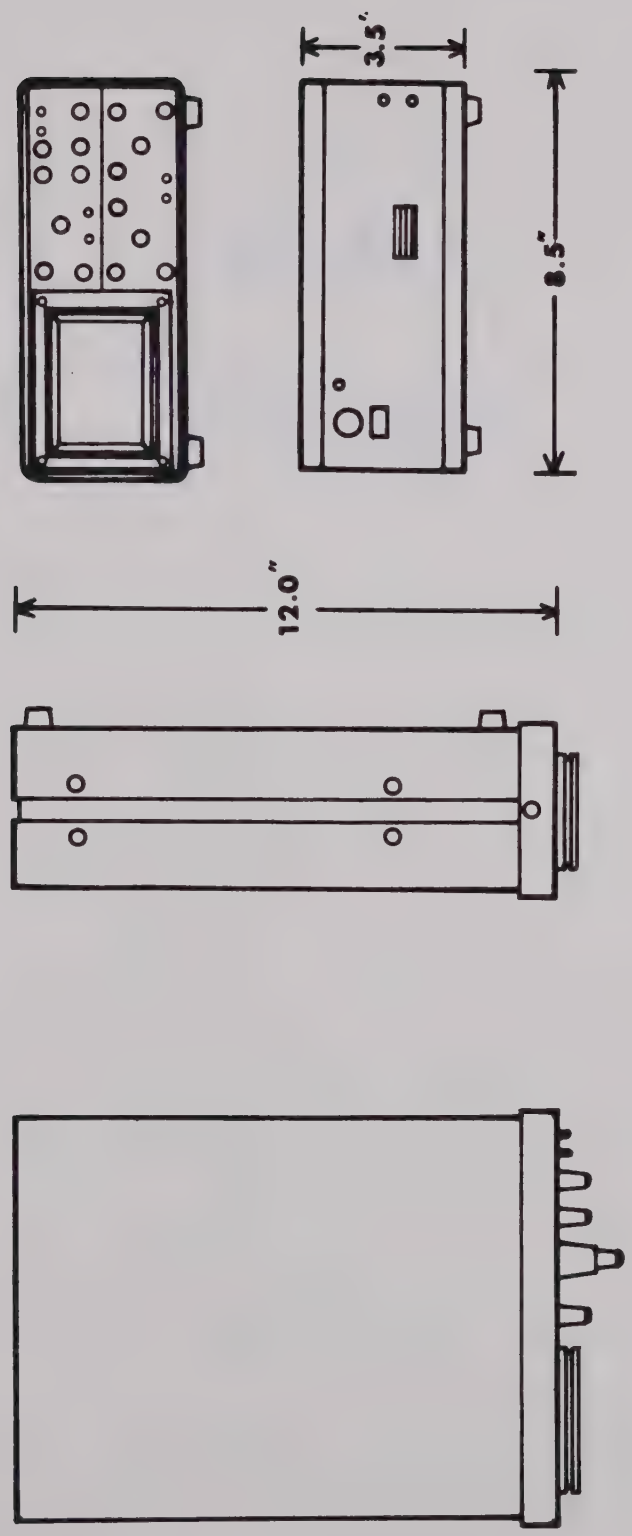

Figure 1-6. Dimensional Outline Drawing

SECTION II

INSTALLATION

2-1. INSPECTION UPON RECEIPT

The Series PS940 is aligned, calibrated, and tested under severe environmental conditions prior to shipment. The instrument is therefore ready for immediate use upon receipt. The following checks should be made however, to assure that the instrument has suffered no damage in shipment.

a. A visual inspection of the shipping container should be accomplished prior to acceptance from the carrier. If extensive damage of the shipping container is evident, a description of the damage should be noted on the carrier's receipt and signed by the carrier's agent. If damage is not apparent until the instrument is unpacked, a claim for concealed damage should be placed with the carrier within 15 days of receipt. All shipping containers and filler material must be kept for inspection.

b. A visual inspection for damage should be accomplished upon removing the instrument from the shipping container. Remove the top and bottom covers and check for loose or broken components.

2-2. BATTERY OPERATION

The battery pack is composed of six "D" size lead acid batteries connected in series to produce 12 volts DC. The individual cells are completely sealed and never need to have water added or other maintenance. Over 200 charge-discharge cycles are expected before the battery must be replaced. To operate the Series PS940 on batteries, unplug the AC power cord, use the power switch on the rear panel of the Series PS940 to turn on and off the instrument. To recharge the battery pack, plug in the AC line cord to the power line. Place the Series PS940 rear panel AC power switch to Charge. The battery pack should be charged for 12-14 hours to fully recharge the battery. The battery pack is trickle charged when the Series PS940 is operated from the AC line.

To install the battery pack to the rear panel of the Series PS940, perform the following steps:

1. Unplug the AC power cord and place the front panel protective hood over the front panel knobs.
2. Place the Series PS940 on its protective hood on a flat surface such that the rear panel is facing upwards toward you.
3. Place the battery pack spacer plate on the rear panel between the black aluminum extrusion pieces so that the two holes for the red and black external DC power jacks line up.
4. Place the white battery container on the spacer and after observing the proper polarity of the battery plug, insert the plug into the battery jacks on the rear panel. The pin connected to the red wire should be inserted into the red plus jack.

WARNING

Do not insert the battery pack connector into the rear panel in the wrong polarity or the fuse will blow inside the Series PS940. Make sure the red plus lead of the battery pack connector is inserted into the red plus jack of the rear panel. Do not short the two pins of the battery connector against any metal object since arcs and severe burns may result.

5. Place the metal plate containing the four pem nuts on top of the battery container.

6. Secure the plate and battery container to the rear panel using the two long 6-32 screws provided.

7. Secure the black plastic protective cover to the battery pack by fastening the four rubber feet with screws which pass through the feet, plastic cover and into the metal plate.

To remove the battery pack reverse the above sequence of instructions.

The battery pack may be received in a partially discharged condition due to time of shipment and handling before receipt. The battery pack should be recharged overnite before attempting to utilize its maximum operating time. The front panel power on light does not come on when the battery is being charged.

An external source of DC, other than the battery pack, may be used to operate the Series PS940. This external DC source should be between 10 volts and 16 volts, approximately 12 watts. Be sure to observe the proper polarity since the Series PS940 internal power supply is protected against the wrong external DC polarity by a clamping diode and fuse. The wrong connection will blow the fuse. The external DC input lines are insulated from the Series PS940 chassis ground and either the plus or minus DC lines may be connected to chassis ground without problem. The Series PS940 rear panel power switch will turn the instrument on and off when an external DC source is used.

SECTION III

OPERATION

3-1. OPERATING INSTRUCTIONS

3-2. FRONT PANEL CONTROL FUNCTIONS AND CONNECTIONS

The Series PS940 front panel controls are divided up into five sections for ease of identification and operation. These sections are as follows: Channel 1 vertical input and controls, Channel 2 vertical input and controls, trigger input and controls, sweep controls and CRT controls. Paragraphs 3-3 through 3-7 describe the Model PS941 front panel controls and connectors. Paragraph 3-8 describes the different controls used for the Model PS943 that are in addition to the ones used on the PS941.

3-3. Channel 1 Vertical Section

a) BNC CONNECTOR	Signal input connector for CHANNEL 1. Impedance is 1 megohm paralleled by approximately 47 pf.
b) POSITION	Positions the CHANNEL 1 trace vertically on the CRT, and also controls vertical trace position in the ADD mode.
c) INPUT COUPLING (AC/DC/GND)	Three position switch controls the signal coupling to the vertical attenuator, either in a direct (DC) or capacitive (AC) mode. The third position (GND), grounds the vertical attenuator input without grounding the input signal.
d) VERTICAL SENSITIVITY (VOLTS/DIV)	Eleven position switch which selects calibrated vertical deflection factors from 10mV per division to 20 volts per division in a 1-2-5 sequence.
e) VERNIER GAIN	Red knob in center of VOLTS/DIV knob provides a variable deflection factor when moved out of the CAL (or detented) position. It provides for overlapping vertical deflection factors and extends the 20 volt/division range to approximately 50 volts per division.
f) TRIGGER SELECT (INT 1+2/INT CH 1)	Two position switch which selects the source of internal trigger signals. INT CH 1 allows trigger signals from CH 1 only, while INT 1+2 selects a trigger signal which is the summation of signals in both Ch 1 and Ch 2 vertical amplifiers.

3-4. Channel 2 Vertical Section

a) BNC CONNECTOR	Signal input connector for CHANNEL 2. Impedance is 1 megohm paralleled by approximately 47 pf.

b) POSITION — Positions the CHANNEL 2 trace vertically on the CRT.

c) INPUT COUPLING (AC/DC/GND) — Three position switch controls the signal coupling to the vertical attenuator, either in a direct (DC), or capacitive (AC) mode. The third position (GND), grounds the vertical attenuator input without grounding the input signal.

d) VERTICAL SENSITIVITY (VOLTS/DIV) — Eleven position switch which selects calibrated vertical deflection factors from 10mV per division to 20 volts per division in a 1-2-5 sequence.

e) VERNIER GAIN — Red knob in center of VOLTS/DIV knob provides a variable deflection factor when moved out of the CAL (or detented) position. It provides for overlapping vertical deflection factors and extends the 20 volt/division range to approximately 50 volts per division.

f) CH 2 POLARITY (NORMAL/INVERT) — Two position switch which selects zero degrees (NORMAL) or 180° phase shift (INVERT) of the CHANNEL 2 input signal.

3-5. Trigger Section

a) BNC CONNECTOR — External trigger signal input connector. Impedance is one megohm.

b) SOURCE (INT/EXT) — Two position switch which selects a trigger signal from either the internal vertical signal or the signal at the external trigger BNC connector. In the INT position, the trigger signal is dependent upon the setting of INT 1+2/INT CH 1 switch.

c) SLOPE (+/–) — Two position switch allows control of the slope of the trigger signal.

d) LEVEL — Controls the point on the trigger signal wave form at which the horizontal sweep will start. This control is inoperative when in the automatic trigger mode, since in AUTO, the sweep starts at the zero axis crossing.

e) MODE (DC/AUTO/AC/LF REJ/HF REJ) — Five position trigger mode and coupling switch. In DC, the trigger signal is direct coupled to the trigger generator. In the other four positions, the trigger signal is AC coupled. The AUTO mode causes the sweep to free run in the absence of a trigger signal to provide a reference baseline. In AC, the trigger

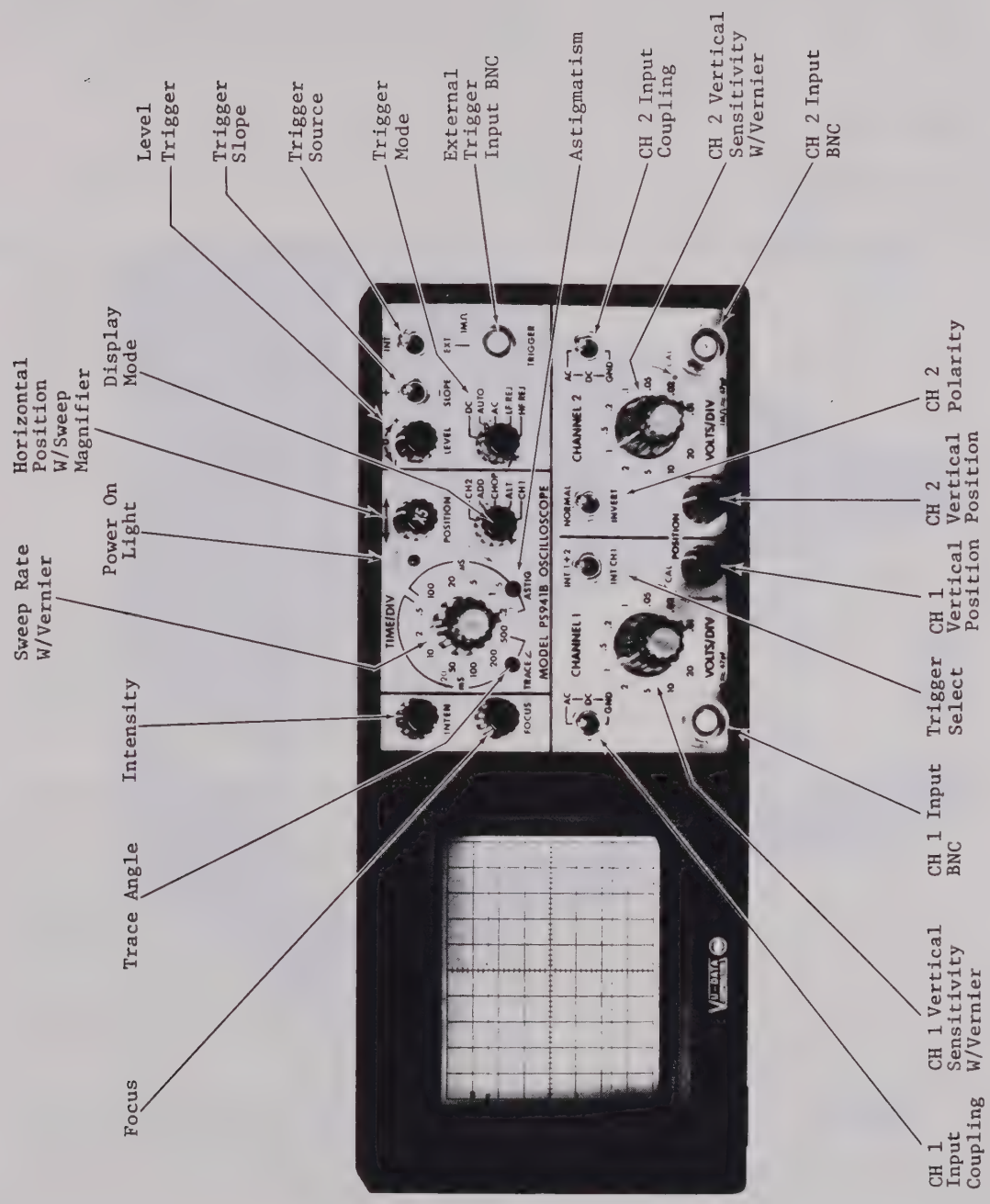

Figure 3-1. Series PS940 Operating Controls

amplitude requirements increase below 40 Hz. The amplitude requirements increase below 50 Hz in the LF REJ position and above 50 KHz in the HF REJ position.

3-6. Sweep Section

a) POSITION — Controls the horizontal position of the trace.

b) SWEEP MAGNIFIER (X5) — Push-pull switch actuated by pulling the horizontal position knob out. In the extended position (out) the sweep rate is magnified five (5) times faster than indicated by sweep rate (TIME/DIV) switch. In the non-extended (in) position the sweep is at the basic sweep rate (X1).

c) SWEEP RATE (TIME/DIV) — Twelve position, plus push-pull selector, provides 21 calibrated sweep ranges from 100 nanosec/div to .5 sec/div.

d) VERNIER — Center red knob of the TIME/DIV control slows down the sweep speed as the control is rotated counterclockwise. When the knob is clockwise in the CAL position, the sweep rate is as indicated by the TIME/DIV knob. The sweep rates indicated in red are selected by pulling out on the Vernier knob.

e) DISPLAY MODE (CH 2/ADD/CHOP/ALT/CH 1) — Five position switch controls the mode of operation. CH 1 position selects Ch 1 only. ALT provides dual trace operation with sweeps alternating between Ch 1 and Ch 2. In CHOP, the Ch 1 and Ch 2 signals are electronically switched at about a 100 KHz rate to provide dual trace. In the ADD position the Ch 1 signal is added to the Ch 2 signal. Vertical position for this mode is provided by the Ch 1 vertical position control. The CH 2 position selects Ch 2 only.

f) TRACE ∠ — Screwdriver adjustment through the front panel which controls the horizontal angle of the trace relative to the graticule.

g) ASTIGMATISM — Screwdriver adjustment through the front panel for control of trace astigmatism.

h) POWER INDICATOR — Green LED indicates power on.

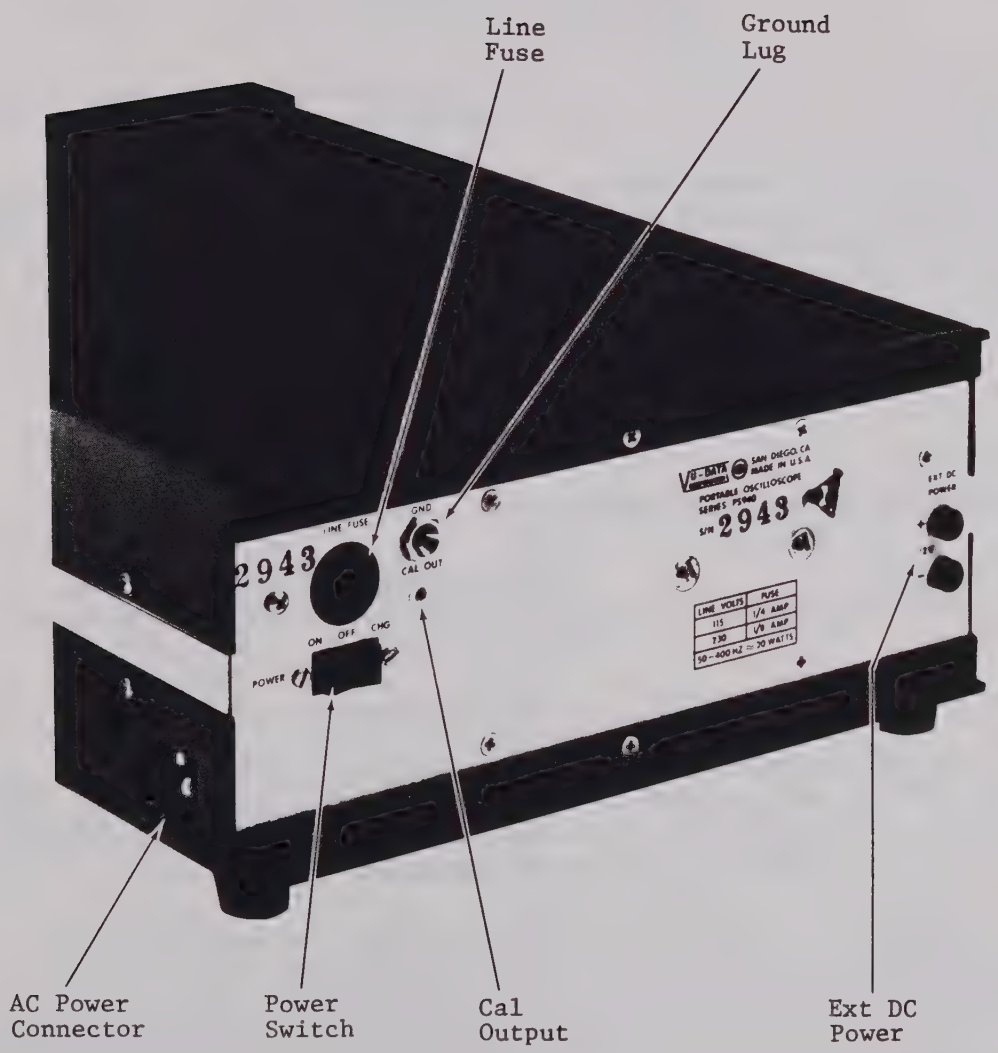

Figure 3-2. Rear Panel View of Series PS940

3-7. CRT Controls

a)	INTENSITY	Controls trace intensity.
b)	FOCUS	Controls trace focus.

3-8. PS943 Controls

Model PS943 adds the X-Y mode of operation. The actual positioning and selecting of front panel controls to obtain X-Y operation will be discussed later in paragraph 3-21. During X-Y operation there is no Ch 1 vertical positioning. Only the Ch 2 vertical position control will position the trace vertically on the CRT.

3-9. REAR PANEL CONTROL FUNCTIONS AND CONNECTIONS

a)	POWER (ON/OFF/CHG)	Three position rocker power switch turns scope on for normal operation or charges the external battery pack.
b)	AC POWER CONNECTOR	Three terminal power cord connector.
c)	115/230V SWITCH	Slide switch selects the proper taps on the power transformer to match the AC line voltage. The switch is located above the fuse and is hidden by the top cover.
d)	FUSE	Power line fuse for instrument protection.
e)	CAL	Pin jack, which provides a one volt P-P square pulse at about 1 KHz for calibrating input probes.
f)	DC POWER CONNECTOR	Two terminal connector for external battery power input.
g)	GND	Provides chassis ground.

3-10. FIRST TIME OPERATION

When operating the Series PS940 for the first time, the following procedures will help you to become familiar with the operating controls and at the same time serves as a useful self test for proper operation.

a. Connect the power cord, which is supplied with the unit, to the rear panel power connector and check that the line voltage switch is set for the line voltage that you will use.

NOTE

If the line voltage switch is changed, be sure that the proper amperage line fuse is installed; 1/4 amp for 115V, 1/8 amp for 230V.

b. Plug the power cord into the AC outlet and turn the power switch on the rear panel to ON. Allow one to two minutes for warm up time.

c. Set the front panel controls as follows:

Vert Input Coupling	Ch 1-DC, Ch 2-DC
Vert Sensitivity (VOLTS/DIV)	Ch 1-.5/div, Ch 2-.5V/div
Vert Vernier	Ch 1-CAL (CW), Ch 2-CAL (CW)
Vert Position	Ch 1 Midrange, Ch 2 Midrange
Trigger Select	INT 1+2
Ch 2 Polarity	NORMAL
Trigger Source	INT
Slope	+
Level	0
Trigger Mode	AUTO
Sweep Rate (TIME/DIV)	1 mS
Sweep Vernier	CW pulled out
Horiz Position	Midrange
Display Mode	CH 1
Intensity	CW
Focus	Midrange

d. Connect a X1 input probe to Ch 1 Vert Input BNC and probe the CAL output jack on the rear panel. You should observe a square pulse two divisions in amplitude, at a frequency of about 1 KHz. Reduce the intensity and adjust the focus for a suitable display.

e. Rotate the Ch 1 vert position control so that the square pulse is symmetrical about the y-axis centerline. Set the Ch 1 AC/DC/GND switch to AC and note the downward shift of the square pulse due to the input now being AC coupled. Switch from AC to GND and note that the square pulse is replaced by a line. Return the switch to DC.

f. Rotate the Ch 1 vertical vernier CCW and note that the square pulse decreases in amplitude.

g. Switch the display mode switch from CH 1 to CH 2 and connect the input cable to Ch 2. You will observe the same display as previously noted. Operate the Ch 2 vertical controls as just performed for Ch 1.

h. Connect another signal input cable from Ch 1 input BNC to the CAL output signal. Switch the display mode switch to ALT and observe a dual trace display.

i. Switch to INT CH 1 and note that the Ch 2 trace inverts as the Ch 2 Polarity (NORMAL/INVERT) switch is operated. Finding out which trace belongs to Ch 2 is easily accomplished by operating the Ch 2 vert position control or switching the Ch 2 AC/DC/GND switch to ground.

NOTE

With the present control setup, the scope will free run if the Ch 1 AC/DC/GND switch is set to GND. This is because the trigger signal is being derived from Ch 1 only and grounding out the Ch 1 signal removes the trigger signal.

j. Switch back to INT 1+2 triggering and note the display as the two traces are positioned vertically apart. When the waveforms do not overlap, the normal triggering will be disturbed due to the AC coupling capacitor used in the AUTO trigger mode. This is normal and may be modified by switching to DC trigger coupling or to LF REJ for high frequency signals. With the trigger selected from INT CH 1 or EXT, there is no problem in separating the traces, since there is no alternating charge disturbance of the triggering signal on the coupling capacitor.

k. Return to AUTO mode. Operate the SLOPE switch from plus to minus and note the square pulse polarity change at the start of the sweep.

l. Switch from AUTO to AC on the trigger mode switch and operate the level control. The trace will disappear when the level setting is greater than the signal amplitude.

m. Operate the sweep controls changing the horizontal positioning, sweep rate (TIME/DIV) switch and vernier. Pull the sweep vernier out and note the increased sweep rate.

n. Switch to CHOP mode and note display. By switching each vertical input coupling switch to GND, trigger mode to AUTO and adjustment of the sweep rate, the chopping action on the trace may be observed. Positioning the two channel vertical controls apart will display a square pulse on the CRT. This shows how each input is sampled as the trace moves across the screen.

o. Switch to the ADD mode and return the vertical coupling switches to DC. Position the trace, using the Ch 1 vertical position control. Operate the Ch 2 Polarity switch and note the algebraic addition or subtraction of the signals.

p. Switch display mode switch to CH 2 and note loss of Ch 1 signal influence. Operate the Ch 2 vertical sensitivity (VOLTS/DIV) switch noting the amplitude change. Switch to INT CH 1.

q. Remove the signal from Ch 1 vertical input and note that the sweep free runs. Switch from INT CH 1 to INT 1+2 and the display should become stable.

r. With a small screwdriver, adjust the astigmatism control for the sharpest display.

s. Switch the Ch 2 input coupling switch to GND. Adjust the trace angle control so that the trace is parallel with the graticule centerline.

3-11. GENERAL OPERATION

3-12. Input Signal Probes

When 10X probes are used with the vertical inputs, they must be compensated for the time constant associated with each input channel. The CAL output may be used to provide the 1 KHz square pulse signal. In using other square pulse sources, it is important not to exceed a frequency of about 5 KHz or the amplitude of the trace will change, making proper probe compensation difficult. The proper waveform is shown in Figure 3-3.

3-13. Channel 1 or Channel 2 Operation

CHANNEL 1 or CHANNEL 2 may be operated as two separate vertical amplifiers by selecting the desired channel using the display mode switch. With the trigger controls set to INT and INT 1+2, the trigger signal will be synchronized to the channel selected by the display mode switch. If INT CH 1 is selected, the trigger signal will come from Ch 1 only and may be used to synchronize the Ch 2 signal frequency to that of the Ch 1 signal frequency by observing a zero beat of Ch 2. It should be noted that in this mode, if the Ch 1 input coupling switch is placed to GND, there will be no trigger signal. When changing the display mode switch, it is advisable to recheck the settings of the trigger source, slope, mode, and level controls to make sure the display is triggered properly.

Each channel has a separate vertical sensitivity selector (VOLTS/DIV) switch with its associated vernier gain control. This switch is accurate when the vernier gain control is in the detented (CW) position. This gain control has a minimum of 2.5 to 1 change so that VOLTS/DIV ranges of 10mV/Div to above 50V/Div can be set.

CAUTION

For accurate, calibrated vertical measurements, the vernier gain control (red knob) must be in the CAL position (CW).

The input coupling switch for each vertical input channel is used to block DC when it is placed in the AC position. The low frequency corner is about 2 Hz with a direct input and approximately 0.2 Hz when using a 10X probe.

CAUTION

Do not exceed 400 volts DC + peak AC when this switch is in the AC position.

The GND position of the input coupling switch is useful when positioning the trace to a zero volt or other reference level for measuring DC levels.

3-14. Alternate Trace Operation

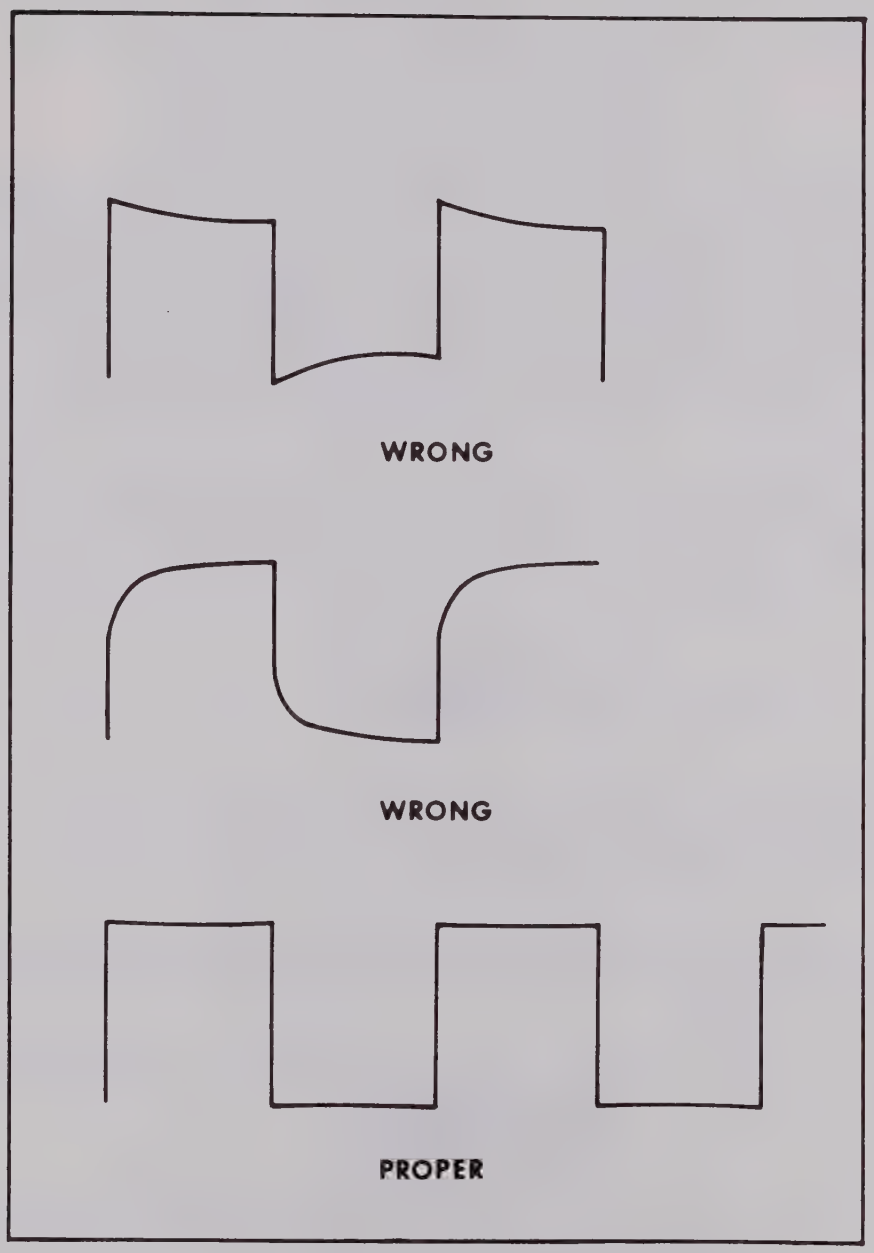

Figure 3-3. Compensated Waveform

Dual trace operation is selected by placing the display mode switch to ALT. In this position, the trace alternates full sweeps between Ch 1 and Ch 2. Each trace may be vertically positioned by the Ch 1 and Ch 2 position controls, however horizontal movement of both traces is controlled together by the horizontal position control.

With the trigger controls placed in AUTO, INT and INT 1+2, the sweeps will be properly triggered, provided the signals overlap each other. When the waveforms do not overlap, the normal triggering will be disturbed due to the AC coupling capacitor used in the AUTO trigger mode. This is normal, and may be modified by switching to DC coupling, or to LF REJ for high frequency signals. In LF REJ, the coupling capacitor is much smaller, reducing its effect. Switching to INT CH 1 will also remove the sweep jitter, because the trigger signal is only taken from the CH 1 vertical amplifier before the electronic chopper. This trigger mode is useful for determining the phase relationship between the CH 1 and CH 2 signals. In INT 1+2, the phase relationship of the two traces is not determined since the trigger signal is derived alternately from each vertical channel so that the start of one sweep may not be time related to the start of the next sweep.

3-15. Chop Operation

In the CHOP display mode, an electronic chopper operating at a frequency of about 100 KHz alternately connects the Ch 1 and Ch 2 vertical amplifiers to the vertical output amplifier. It is useful for dual trace display of low frequency signals. Each channel is sampled for about 10 microsecond intervals alternately as the trace sweeps horizontally across the CRT face. For stable triggering, INT CH 1 should be selected. INT 1+2 contains components of the chopped waveform and will result in trace jitter.

3-16. Add Operation

The ADD display mode algebraically adds the Ch 1 waveform to the Ch 2 waveform. To subtract Ch 2 from Ch 1, operate the Ch 2 polarity switch. Use Ch 1 vertical position control to move the trace vertically, since the Ch 2 vertical position control is inoperative in this mode. Triggering may use either EXT, INT CH 1 or INT 1+2 sources. In INT 1+2 the trigger signal is the algebraic sum or difference composite of the two vertical input signals and is useful in special triggering situations; for instance, where it is desired to trigger on a noise pulse which is present after addition or subtraction of the two input waveforms.

When switching to the ADD display mode, the trace at times may be driven off screen due to the addition of DC Components in the waveform. If the trace is not visible, use the Ch 1 vertical position control to bring the trace on screen and the vertical sensitivity selector switches to reduce the amplitude.

3-17. Triggering

The Series PS940 may be triggered from an external or an internal source. The internal source has two modes: (1) INT 1+2 signal is the composite of the two vertical input signals taken after the electronic chopper. (2) INT CH 1 signal is from Ch 1 vertical amplifier only and removed before the electronic chopper. For CH 1 or CH 2 mode, either internal trigger source may be used. In ALT display mode, either source may be used; however, INT CH 1 will give a valid phase relationship between the two traces. In CHOP display mode, use INT CH 1 for jitter-free triggering. Either INT 1+2 or INT CH 1 may be used in the ADD display mode.

The SLOPE switch selects either the plus or minus slope of the waveform at which the sweep starts, and the LEVEL control determines at what point on that slope the trigger occurs. The LEVEL control is disabled when in the AUTO or free run trigger condition. In AUTO, a bright baseline is provided for reference when there is no input signal for triggering. AUTO is AC coupled and requires increasing trigger signal amplitude below about 40 Hz. Except for DC coupling, the trigger signal AC coupling is as follows: AC amplitude requirements increase below 40 Hz, LF REJ amplitude requirements increase below 50 KHz, HF REJ amplitude requirements increase above 50 KHz.

3-18. Sweep Control

The time per division of the horizontal sweep is controlled by a 12 position rotary switch, a push-pull magnifier, and a rotary vernier pot for uncalibrated sweeps. In the CAL (CW) position of the vernier, time may be read directly from the graticule by multiplying the number of horizontal divisions of interest by the selected TIME/DIV factor. For example, if one cycle of a waveform takes 10 horizontal division and the TIME/DIV is set to 1 usec with vernier in CAL, the time per cycle would be 10 usec and the frequency is 100 KHz. $F = \frac{1}{t}$.

3-19. CRT Control

The trace brightness is controlled by the INTENSITY knob. At high intensities the FOCUS knob may need readjusting. The sharpest picture will be obtained using normal intensity and adjusting both the FOCUS and ASTIGMATISM controls. ASTIGMATISM is screwdriver adjusted through the front panel. Use a sine wave when setting the FOCUS and ASTIGMATISM controls. A screwdriver adjustment is also provided to control the angle that the trace makes relative to the graticule. To adjust the TRACE ANGLE, place the trigger mode in AUTO, Sweep rate to about 1 msec and ground both vertical inputs. Adjust the TRACE ANGLE control such that the trace is parallel with the horizontal centerline in the graticule.

3-20. Sweep Magnifier Control

To operate the X5 sweep magnifier, pull the front panel horizontal position knob out. This expands the sweep by a factor of five so that various waveforms on the trace may be examined in more detail by rotating the horizontal position control to locate the desired waveform. Pushing in the horizontal position knob returns the sweep to the unmagnified (X1) rate.

3-21. X-Y Operation (Model PS943 Only)

To operate the Model PS943 in the X-Y mode perform the following steps. Note that all X-Y positions and references are in green on front panels.

a. Connect the horizontal (X) signal to the Ch 1 vertical input BNC connector. Connect the vertical (Y) signal to the Ch 2 vertical input BNC connector.

b. Switch the sweep rate (TIME/DIV) switch fully counterclockwise to one of the last two positions. Either of these last two positions conditions the horizontal board for X-Y operation.

c. Switch the trigger mode switch to the AUTO (X-Y) position.

d. Switch the INT 1+2/CH 1/X-Y switch to the bottom X-Y position. Note that the CH 1 position of the INT 1+2/CH 1/X-Y switch is the same as the INT CH 1 position of INT 1+2/ INT CH 1 used on the Model PS941.

e. Switch the input coupling switches for Ch 1 and Ch 2 to the coupling desired and set the vertical sensitivity (VOLTS/DIV) switches to the desired gain.

f. The scope will now display the X-Y relationship of the input signals. Vertical position is controlled by the Ch 2 vertical position control. The Ch 1 vertical position control will have no effect. Horizontal position is controlled by the horizontal position knob as it is in normal operation. The Y signal may be inverted by the Ch 2 polarity switch.

g. To return the oscilloscope to normal operation, switch the sweep rate selector switch (TIME/DIV) to the proper sweep range, switch the INT 1+2/CH 1/X-Y switch to either INT 1+2 or CH 1. The trigger mode switch may be left in AUTO if desired.

SECTION IV

THEORY OF OPERATION

4-1. GENERAL

The Series PS940 Portable Oscilloscope circuits are contained on five printed circuit boards. The vertical deflection circuits are located on the vertical input and output boards. The trigger, sweep and mode control, blanking and horizontal deflection circuits are located on the horizontal board. The power supply including a built in battery charger, is located on the power supply board. A common master board provides the signal and power interconnections for the other four boards. Refer to Figure 4-9 Block Diagram and the Schematic Diagrams 9401062, 9401024, 9401028, 9401029, 9401031 to aid in understanding the circuit theory of operation. The following discussion in paragraphs 4-2 through 4-11 applies to both PS940 Series models. Paragraph 4-12 contains added circuitry discussion as it applies to the changes on both the horizontal and vertical input boards for X-Y operation (Model PS943).

4-2. VERTICAL INPUT BOARD

All of the vertical deflection circuits are located on the vertical input board, except for the delay line, which is mounted between the master board and the CRT magnetic shield, and the vertical output circuit. The CH 1 vertical amplifier is almost identical to the CH2 amplifier up to the "add" circuit where the two channel signals are summed together. The exceptions are: (a) CH1 has no invert switch, (b) CH 2 position control affects the output of the CH 1 electronic chopper circuit, and (c) only CH 1 has an internal trigger signal takeoff before the CH 1 chopper circuit. The analog delay line provides a signal delay to the vertical output amplifier so that the leading edge of the input signal which starts the sweep may be viewed.

CHANNEL 1 vertical input signal is coupled through the AC/DC/GND switch to the X1 or ÷ 100 input attenuator. The input buffer amplifier U9 has a high input impedance (so that the input attenuator will not be loaded) and has a low output impedance to drive the post attenuator. The post attenuator has the vernier control providing variable gains between fixed attenuator steps of ÷ 1 to ÷ 50. The combination of input and post attenuators normalizes the input signal to 80 millivolts full scale peak-to-peak. A X1 buffer amplifier unloads the post attenuator and drives the CH 1 chopper circuit. Selecting CH 1 turns the chopper switches on continuously. In the ALT mode the CH 1 chopper switches are on for one sweep and off the next sweep, while the CH 2 chopper is on. The CHOP mode causes the CH 1 and CH 2 chopper switches to alternate at about a 100 KHz rate between channels during the same sweep. Both CH 1 and CH 2 switches are turned on continuously for the ADD mode. For the CH 2 mode, the CH 1 chopper is off, with the CH 2 chopper on. Each channel chopper may be considered as a two pole single-throw electronic switch controlled by a transistor driver. In the CH 1 chopper, one pole (A) conducts input signals and the other pole (B) conducts CH 1 vertical position dc levels. See Figure 4-1.

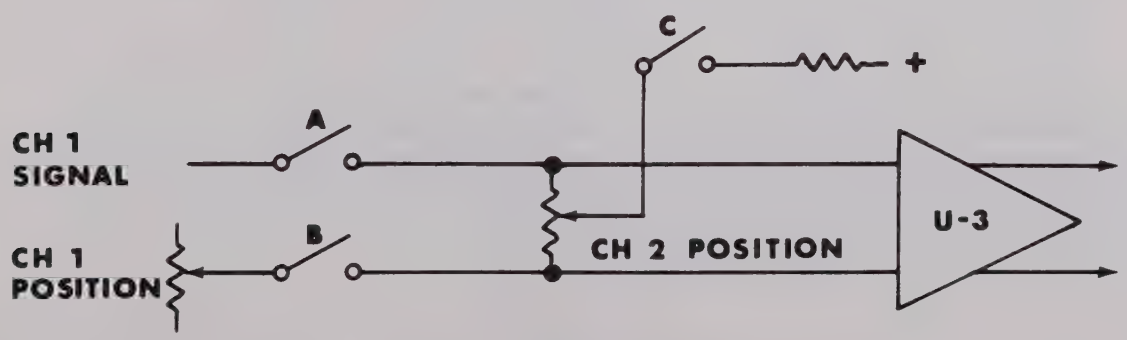

Figure 4-1. Chopper Connections

When the CH 1 chopper is off (A and B open), Switch C is turned on allowing the CH 2 position control to affect the DC output of U3. The CH 2 chopper works identically except that the position control is replaced by an internal balance adjustment.

The amplified CH 1 signal output of U3 is added to signals from CH 2 in a resistive summing network. The output of this "add" circuit is dependent upon the state of the chopper switches as controlled by the mode switch. The INT CH 1+2 trigger pickoff is taken from the addition of CH 1 and CH 2 signals at this point. (INT CH 1 trigger pickoff is taken before the CH 1 chopper.) The added signals leave the vertical board and are delayed by the delay line before driving the vertical output amplifier. This differential input and output amplifier has the required gain and dynamic range to drive the capacitive load of the CRT vertical deflection plates.

The CH 1 vertical circuits are repeated for CH 2 up to the summing network. A reversing switch changes signal and ground to the CH 2 chopper thus providing the CH 2 invert function without affecting the position of the CH 2 trace on the screen.

4-3. Detailed Description

Switch S305 couples the CH 1 vertical input signal from the BNC connector, J301 through C301 for AC coupling, or direct for DC, to the CH 1 input attenuator switch S101. S305 has a position to ground the input to the vertical amplifier without grounding the input signal source. This position gives a ground reference to aid in positioning the CRT trace. The signal is coupled from the input attenuator switch through overload protection elements R127, C109, CR3 and CR4 to buffer amplifier U9. R4 adjusts the DC output of U9 to zero volts. U9 drives the post attenuator and vernier gain control mounted on the rear of the attenuator switch. Refer to Table 4-1 for the vertical input and post attenuator relationship.

Table 4-1. Vertical Attenuation Relationships

Volts/Div	Input Atten.	Post Atten
.01	X1	X1
.02	X1	÷ 2
.05	X1	÷ 5
.1	X1	÷ 10
.2	X1	÷ 20
.5	X1	÷ 50
1	÷100	X1
2	÷100	÷ 2
5	÷100	÷ 5
10	÷100	÷ 10
20	÷100	÷ 20

At low frequencies the vertical input attenuator resistors provide the attenuation, while the shunt capacitors become dominate at high frequencies. Attenuator peaking is controlled by C102. C103 maintains a constant input capacity so that an external divide by ten probe may be used. R109 provides the one Megohm input resistance. See Figure 4-2.

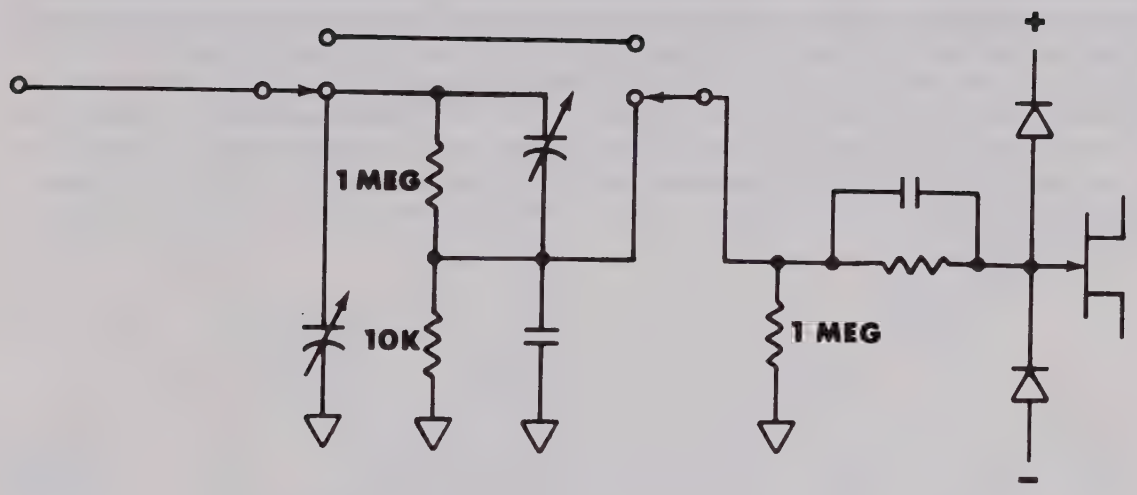

Input Attenuator

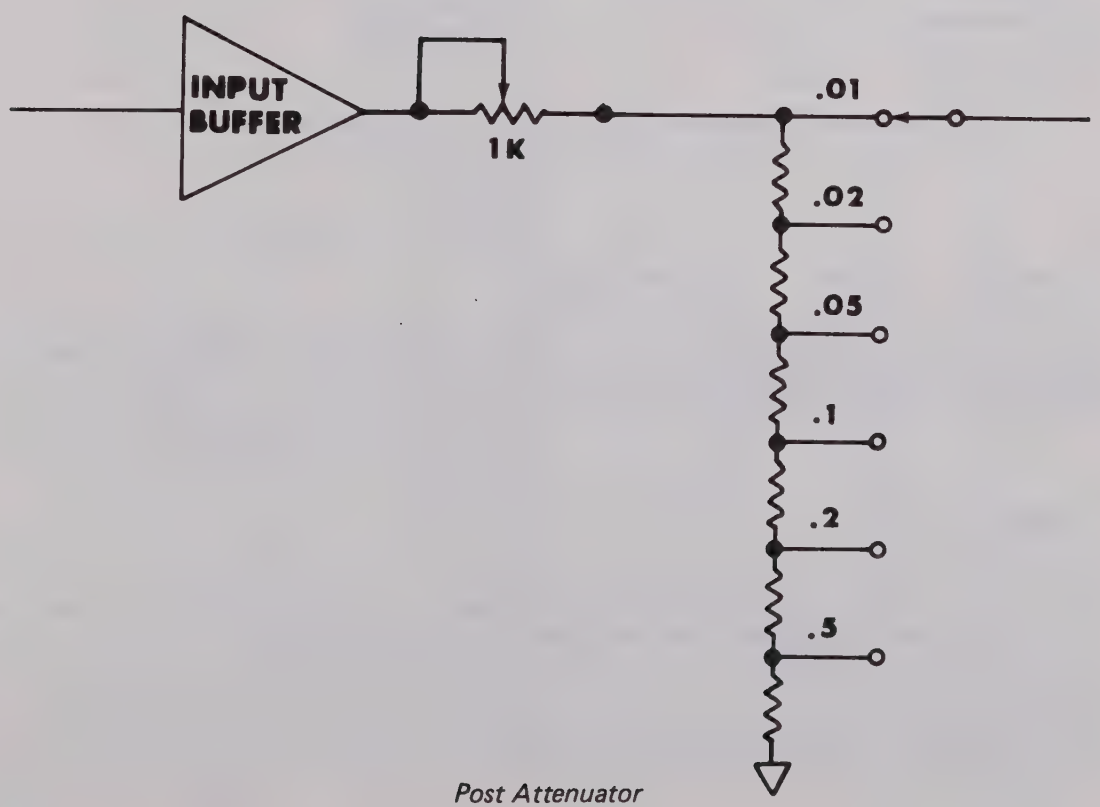

Post Attenuator

Figure 4-2.

The Darlington connected emitter followers of U2 have a very high input impedance to prevent loading of the post attenuator. The DC positioning voltage for CH 1 is fed to Pin 9 of U2. U2 drives the two electronic chopper diodes CR5 and CR6. Conduction of the two chopper diodes is controlled by switch Q2 coupling a DC level through diodes CR7 thru CR11. When Q2 collector is at ground, CH 1 signals will pass through the chopper diodes CR5 and CR6. When Q2 collector goes high, CR5 and CR6 will be back biased, preventing signals from reaching U3. In this state R336 effects the DC level reaching the input of U3 and controls the positioning of the CH 2 trace. R13 adjusts for any inequality in the "on" voltage of CR5 and CR6. R17 adjusts the gain of U3 and is the vertical gain calibration control for CH 1. Emitter follower Q1 picks off the CH 1 trigger signal which is added to the CH 2 trigger signal via R20 and R62. The INT CH 1 trigger signal is coupled through X1 buffer amplifier U4 to the INT CH 1, INT 1+2 trigger selector switch. R40 adjusts the level of the INT 1+2 trigger signal to match that of INT CH 1 (about – 1.2V). U5 amplifies the selected trigger signal by about 12. See Figure 4-3.

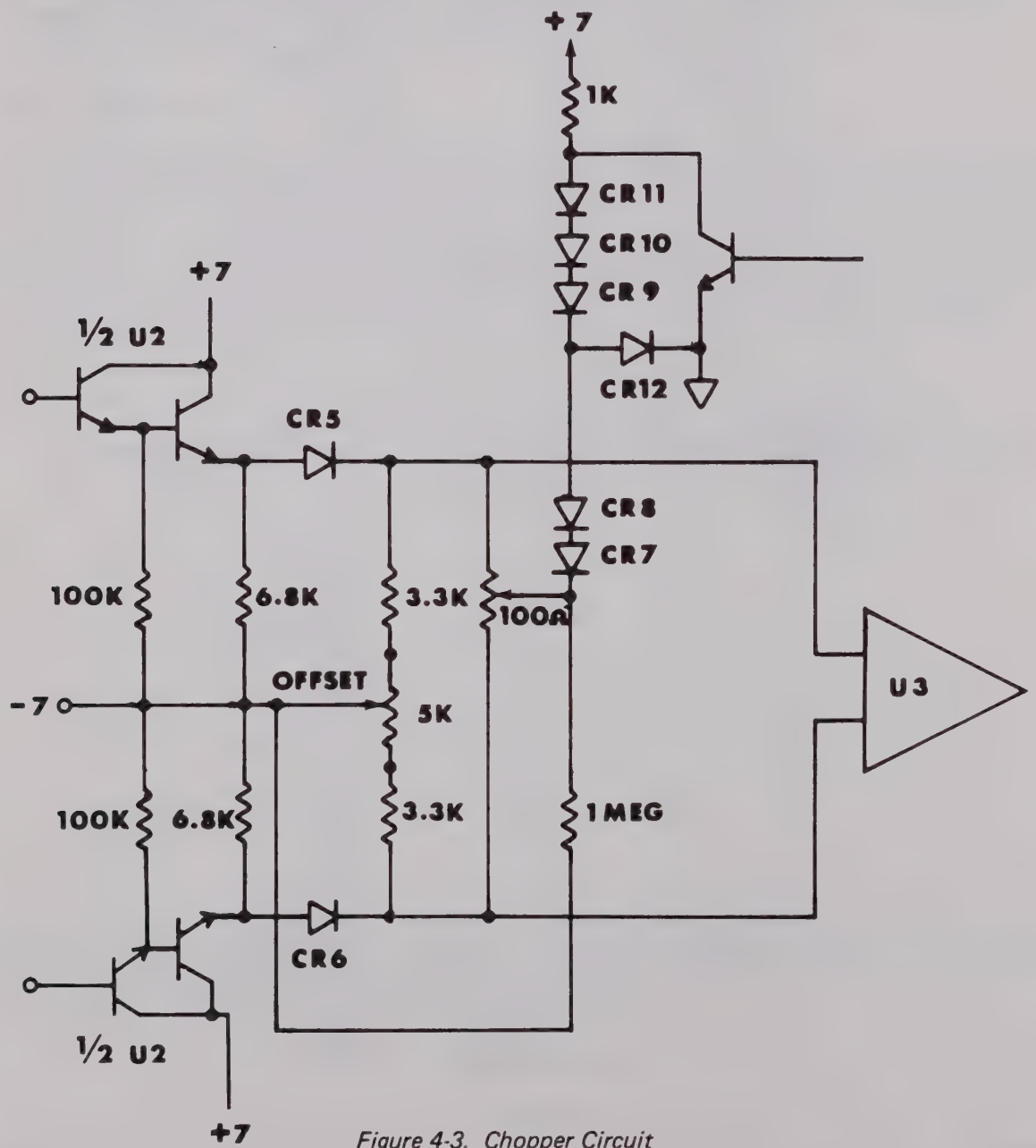

Figure 4-3. Chopper Circuit

Vertical signals for CH 2 are coupled through the attenuators and U10, U7 and U8 in the same manner as CH 1. R53 is used to balance the output of U8. When in the CHOP mode, R59 is the gain CAL control for CH 2. Q4 controls the CH 2 chopper. S307 inverts CH 2 signals.

The resistive summing network for CH 1 and CH 2 signals is composed of two 2.0K resistors located off the master board whose junction drives the delay line. The output of the delay line is terminated by a 1.0K resistor located on the vertical output board. See Figure 4-4, for how the delay line is connected in the circuit. Signal loss through the summing network and delay line is four.

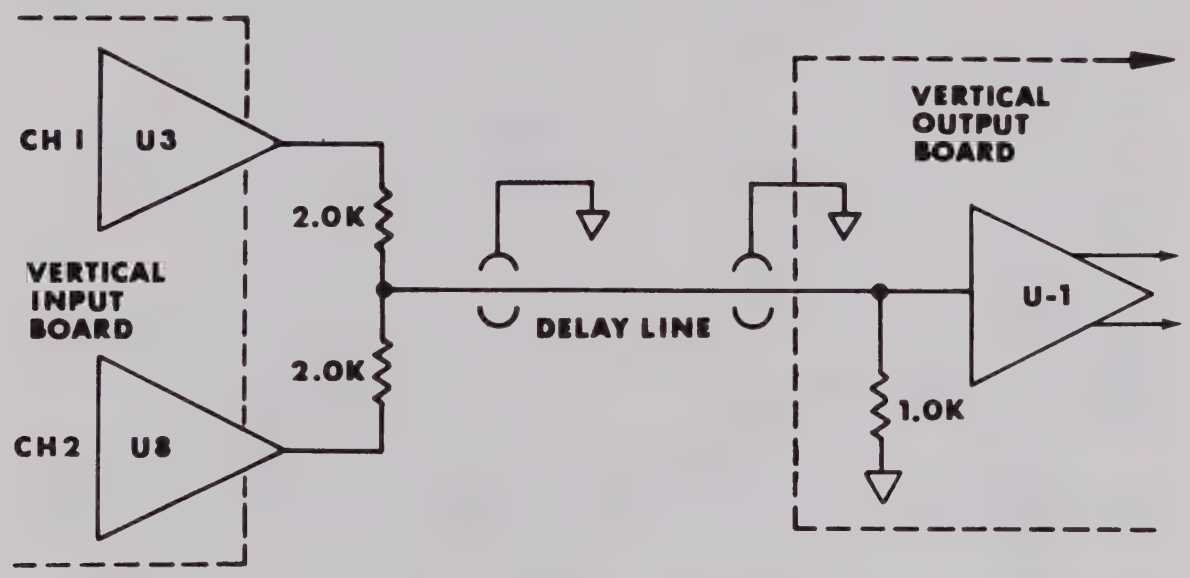

Figure 4-4. Delay Line Connections

4-4. VERTICAL OUTPUT BOARD

The vertical output board converts the single ended signal into a differential signal so that it may be amplified in the vertical output amplifier which drives the CRT vertical deflection plates, Y-1 and Y-2. The single ended to differential output conversion is performed by integrated circuit video amplifier U1. Discrete component high frequency transistors are used to drive the CRT deflection plates due to the high power and voltages required.

4-5. Detailed Description

The vertical signal from the delay line drives Pin 1 of U1; R5, a 1.0K 1% resistor terminates the delay line. R3 is a balance adjustment to compensate for any DC offset coming from the vertical input board through the delay line. U1 drives a common emitter differential amplifier composed of Q1, Q2 with active collector loads of Q3 and Q4. Schottky diodes, CR1 and CR2, prevent Q1 and Q2 from saturating when off screen signals are applied. R7, level adjustment sets the DC quiescent operating point of the collectors of Q1 and Q2 to plus 17V dc. C9 and R10 adjust the high frequency emitter peaking for the output transistors. C1 through C8, plus C10 and C11, provide power supply decoupling.

4-6. HORIZONTAL BOARD

The horizontal board contains all the circuits for generating and controlling a linear ramp which causes the CRT trace to sweep from left to right. It also contains the blanking driver which turns off the beam as retrace occurs and turns on the beam upon command of the sweep control logic. The board contains the oscillator which drives the electronic chopper circuits in the CHOP mode and a second gated oscillator which generates sweeps when the trigger switch is in AUTO.

The linear ramp is generated by an integrated circuit operational amplifier connected as a closed loop integrator. See Figure 4-5.

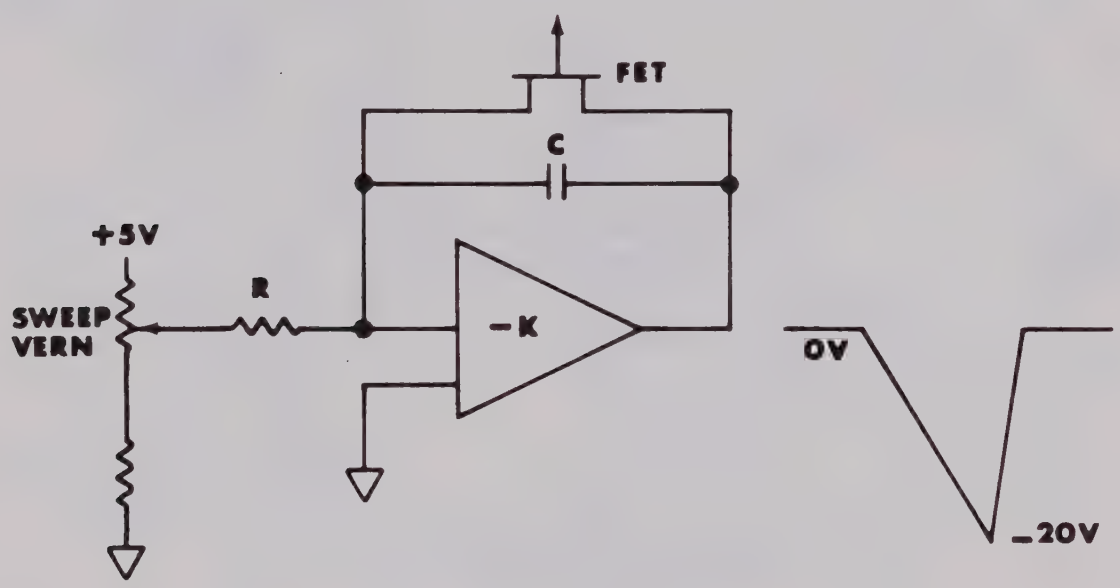

Figure 4-5. Sweep Generator

When the sweep reaches about minus 20 volts, the holdoff one shot fires, which turns on the FET switch. This shorts out the integrating capacitor in preparation for the next sweep. The rate at which the ramp is generated, dv/dt, is dependent upon the value of the integrating capacitor and the amount of integrating current flowing in R. To provide the 21 sweep ranges, four integrating capacitors are used. The other ranges are provided by switching precision resistors which change the integrating current. The time during which the integrating capacitors is being reset to zero volts changes since a larger capacitor value requires a longer time to reset. One deck of the sweep switch changes the timing of the holdoff one shot.

The horizontal output amplifier has a differential input. The linear ramp is fed to one input and the DC horizontal position control voltage is connected to the other input. The horizontal deflection plates are differentially driven by signals of about plus and minus 50 volts centered about ground. The CRT beam is turned off (blanked) while the trace is being reset to the left side of the screen. The same signal which starts the next sweep also unblanks the CRT.

The rest of the Horizontal board circuits contain the analog trigger signal conditioning, trigger comparator for analog level to digital output, and the digital mode and sweep control logic. The digital logic elements are of the TTL family.

4-7. Detailed Description

Refer to schematic Horizontal Board 9401062. Assume that the mode switch is placed in the CH 1 or CH 2 position. Trigger signals from the EXT trig BNC J201, are divided by 30 in attenuator R201 and R202 to normalize external trigger signals to the same level as internal trigger signals. INT/EXT switch S201 selects between internal or external trigger source. Trigger mode switch S3 changes the signal coupling from DC to AC and enables the AUTO mode unijunction oscillator, Q4, in the AUTO mode. C15 and R14 change the frequency response of the trigger coupling for the LF REJ and HF REJ positions. Dual FET, U3, provides a high input impedance for the trigger coupling switch. CR7 and CR8 protect U3 from overloads. The trigger level control R203, supplies a plus and minus DC level to the gate of the second FET of U3. Q6 shorts this level to ground in the AUTO mode. Voltage differences of U3 are balanced out by offset control, R45. From the dual source follower U3, the analog trigger signal and the DC trigger level signal is fed to level comparator U4. This differential comparator converts low level analog input differences into digital logic levels at its output for driving TTL elements. Comparator hysteresis is provided by R54, R44, R55 and R48. The comparator U4 drives U5, SN7451, (dual 2-wide, 2-input and/or invert gates). See Figure 4-6 for internal logic connections. The trigger slope switch S202 controls which output of the comparator is passed through the gate by grounding either pin 3 or 5 of U5. The selected output is differentiated by C34 and R38 and will set U6 flip flop $\overline{Q}2$ (pin 10) to a zero, provided that U5 gate inputs, pins 10 and 13, have been enabled by the holdoff monostable U1, 74L122. See Figure 4-7. U1 fires, when the sweep has reached about minus 20V at the output of sweep generator U2, and sets U6, $\overline{Q}2$ to a one for the duration of the holdoff time. U1 also keeps trigger pulses from reaching U6 during the holdoff time, which might create false triggering. U6, $\overline{Q}2$, pin 11, is a zero during the holdoff time. This provides zero voltage to FET switch, Q1, which shorts out the integrating capacitor of op amp integrator U2. After the holdoff period, U1 resets enabling pulses from U5 to set U6, $\overline{Q}2$ to a one, thus starting another sweep.

In the AUTO trigger mode when there are no trigger signals to fire the comparator (U4), the unijunction oscillator, Q4, starts the sweep via inverters Q2, Q3 at a rate dependent upon the selection C11, C12 or C13. When input trigger signals fire the comparator, charge is removed from the unijunction capacitor by means of CR4, and inverter Q5. This keeps Q4 from oscillating and causing out of sync trigger pulses. The auto oscillator is only enabled in the AUTO position of S3.

The slope of the sweep generator output signal is determined by which integrating capacitor is selected and the magnitude of the integrating current. Integrating capacitors, C7 and C8, form a matched set ratioed to each other to better than one percent. The parallel combination of C9 and C10 is ratioed to C7 and C8 by means of trimmer capacitor C10. The integrating capacitor, C6, for the two slowest sweep ranges is not adjusted. Rather, the integrating current is calibrated by adjusting R9 and R108. Accuracy of the integrating current on the other ranges is maintained by use of 1% metal-film resistors. Sweep vernier control, R2, slows down the sweep by lowering the voltage applied to the integrating current determining resistors. The sweep length is normally adjusted to 12 horizontal divisions by R21.

The horizontal amplifier is a single-ended-in-to-differential-out gain stage that drives the horizontal deflection plates. Gain stability is achieved using local feedback and push-pull outputs provide low distortion at high frequencies. The X5 horizontal scale expander is also located in the horizontal output stage.

Transistors Q21 and Q22 comprise a differential amplifier stage with their emitter coupling through R112 and R113 respectively to current source Q32. Potentiometer R110 and fixed resistor R111

'51 GATES . . . LOGIC & PIN ASSIGNMENTS (TOP VIEW)

7451
DUAL 2-WIDE 2-INPUT
AND-OR-INVERT GATES

'51
POSITIVE LOGIC:
$Y = \overline{AB + CD}$

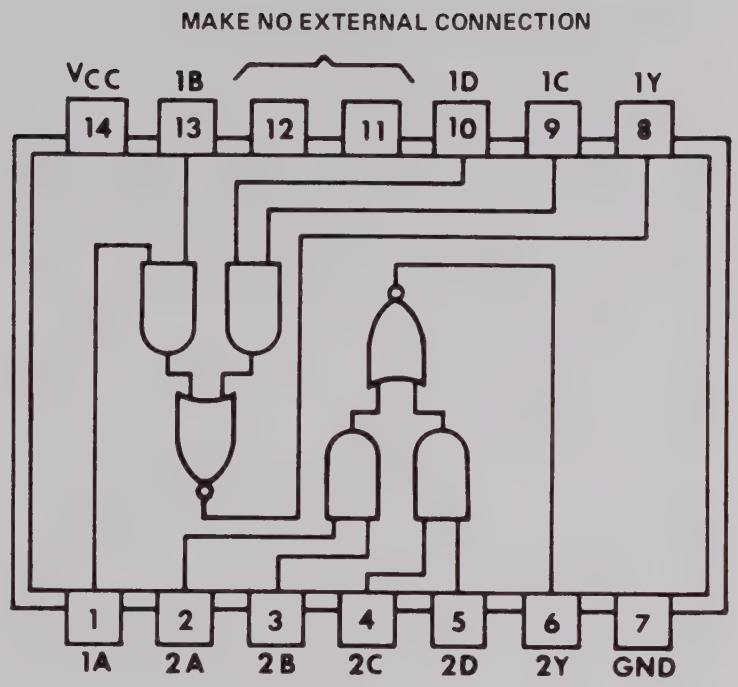

Figure 4-6. TTL Logic Elements — 7451

	INPUTS				OUTPUT
PINS	1	13	9	10	8
PINS	2	3	4	5	6
	1	1	X	X	0
	X	X	1	1	0
	0	X	0	X	1
	X	0	X	0	1
	X	0	0	X	1
	0	X	X	0	1

Table 4-2. SN7451 Truth Table

MONOSTABLE MULTIVIBRATOR . . .
LOGIC & PIN ASSIGNMENTS
(TOP VIEW)

RETRIGGERABLE MONOSTABLE
MULTIVIBRATOR WITH CLEAR

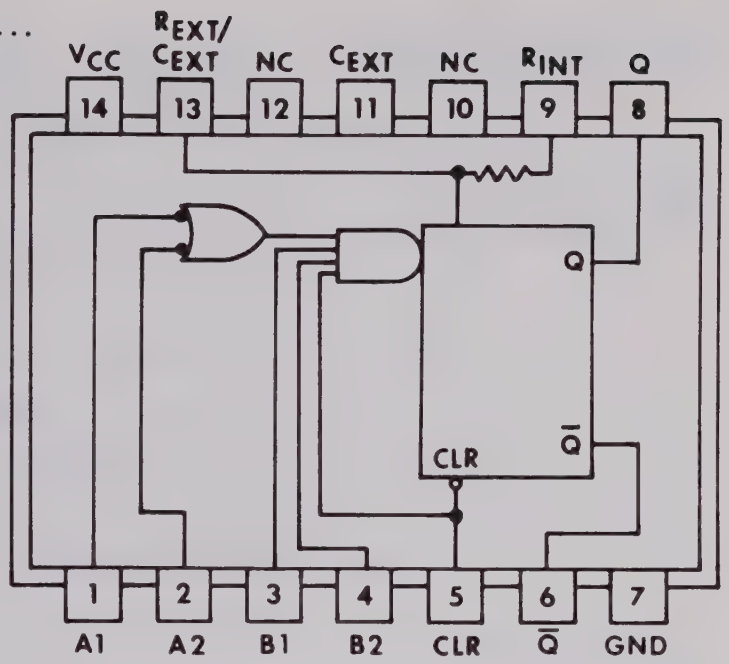

SN74L122(N)
'L122. . . . . RINT = 20KΩ NOM

FUNCTION TABLE

					OUTPUTS	
CLEAR	A1	A2	B1	B2	Q	Q̄
L	X	X	X	X	L	H
X	H	H	X	X	L	H
X	X	X	L	X	L	H
X	X	X	X	L	L	H
X	L	X	H	H	L	H
H	L	X	↑	H	⎍	⎏
H	L	X	H	↑	⎍	⎏
H	X	L	H	H	L	H
H	X	L	↑	H	⎍	⎏
H	X	L	H	↑	⎍	⎏
H	H	↓	H	H	⎍	⎏
H	↓	↓	H	H	⎍	⎏
H	↓	H	H	H	⎍	⎏
↑	L	X	H	H	⎍	⎏
↑	X	L	H	H	⎍	⎏

NOTES:

A. H = high level (steady state)
L = low level (steady state)
↑ = transition from low to high level
↓ = transition from high to low level
⎍ = one high-level pulse
⎏ = one low-level pulse
X = irrelevant (any input, including transitions)

B. To use the Internal Timing resistor of '121, 'L121, '122, or 'L122, connect R_{int} to V_{cc}

C. An external timing capacitor may be connected between C_{ext} and R_{ext}/C_{ext} (positive).

D. For accurate repeatable pulse widths, connect an external resistor between R_{ext}/C_{ext} and V_{cc} with R_{int} open-circuited.

E. To obtain variable pulse widths, connect external variable resistance between R_{int} or R_{ext}/C_{ext} and V_{cc}.

Figure 4-7. TTL Logic Elements — 74L122

FLIP-FLOP.....LOGIC & PIN ASSIGNMENTS (TOP VIEW)

DUAL J-K FLIP-FLOPS WITH PRESET & CLEAR

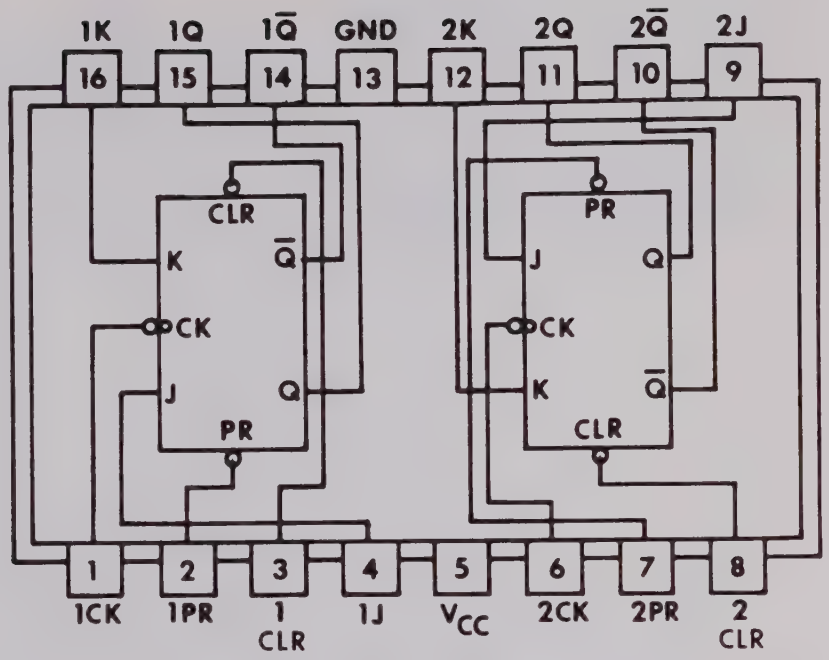

SN7476 (N)

'76, 'H76 FUNCTION TABLE

INPUTS					OUTPUTS	
PRESET	CLEAR	CLOCK	J	K	Q	Q̄
L	H	X	X	X	H	L
H	L	X	X	X	L	H
L	L	X	X	X	H*	H*
H	H	⎍	L	L	Q_0	Q_0
H	H	⎍	H	L	H	L
H	H	⎍	L	H	L	H
H	H	⎍	H	H	TOGGLE	

NOTES:

A. H = high level (steady state), L = low level (steady state), X = irrelevant.

B. ⎍ = high level pulse; data inputs should be held constant while clock is high; data is tranferred to output on the falling edge of the pulse.

C. ↓ = transition from high to low level.

D. Q_0 = the level of Q before the indicated input conditions were established.

E. Toggle: each output changes to the complement of its previous level on each active transition (pulse) of the clock.

*This configuration is nonstable; that is, it will not persist when preset and clear inputs return to their inactive (high) state.

NOTE: Figure 4-6, 4-7 and 4-8 description from TTL Data Book for Design Engineers, Texas Instruments, Inc., Dallas, Texas.

Figure 4-8. TTL Logic Elements — 7476

provide the horizontal calibration adjustment. The signal applied at the base of Q21 is converted by the differential action of the stage into a difference current signal at the collectors of Q21 and Q22. This differential current signal is applied to complementary common base stages, Q17 and Q18 on one side, and Q25 and Q26 on the other side. The common base outputs are coupled to emitter follower transistors Q16, Q19, Q24 and Q27. The emitter followers drive through biasing diodes CR17, CR27, CR19, CR28, CR23, CR29, CR26, and CR30 to the based of complementary common emitter push-pull output stages comprised of Q15 and Q20 on one side and Q23 and Q28 on the other side. Local feedback is employed from X1 and X2 through resistors R81 and R96, respectively to the inputs of the complementary common base stages. This output amplifier provides a differential voltage swing greater than 200V which is necessary to drive the horizontal deflection plates. Diodes CR18, CR16, CR24, and CR25 are used to prevent the output stages from saturating, thus providing for fast recovery from overload. R115 in the emitter circuit of Q32 varies the current through Q32 to bias outputs X1 and X2 symmetrically about OV. Horizontal positioning is introduced through emitter follower Q29 to the base of Q22. Potentiometer R121, the horizontal positioning control, varies the voltage on the base of Q29 which in turn varies the voltage on the base of Q22, thus unbalancing outputs X1 and X2. Scale expander switch S5, which is concentric with positioning control R121, increases the gain of the horizontal output stage by a factor of five when pulled. This is accomplished by dropping the emitter resistance in the emitters of Q22 and Q21. R101 is provided to adjust the gain when in the X5 position.

The blanking driver amplifier consisting of Q11, Q12, Q13 and Q14 has a gain of about 30 to convert TTL logic levels to zero to minus 60 volt signals, to blank the tube. The CRT is unblanked when CRT pin 5 is at zero volts. Q11 and Q12 are the amplifier transistors and Q13 and Q14 are complementary emitter followers to drive the blanking plate.

The previous circuit description is for the mode switch in either the CH 1 or CH 2 position. To select CH 1, pin 8 of U7 is high and pin 6 low. For CH 2 select, pin 8 of U7 is low and pin 6 high. U7 is controlled by static DC levels from mode select switch S2a, b and dynamic square waves from U6 flip-flop. To aid in understanding the operation of U7, refer to Table 4-2. In the ADD mode, S2a, b, puts zeros on U7 pins 3, 13, 10 and 4, which causes outputs 6 and 8 to be "ones" turning on CH 1 and CH 2 at the same time. In the ALT mode, Q8 emitter is grounded through switch S2a, causing blanking signals to clock flip-flop No. 1 of U6 through clock input pin 1 of U6. The flip-flop changes state for every sweep, causing U7 pins 6 and 8 to alternate ones and zeros, turning on the vertical amplifiers sequentially. The flip-flop changes state during the holdoff part of the sweep cycle so that the selected channel trigger signal is present at the comparator U4 when the holdoff mono U1 resets. In the CHOP mode, the emitters of Q7, Q9 and Q10 are grounded through switch S2. Q9 and Q10 form a 200 KHz multivibrator. Its output drives inverter Q7, which clocks U6 flip-flop No. 1. The flip-flop outputs through U7 turn on and off the vertical input amplifiers at about a 100 KHz rate.

Four additional controls are located on the horizontal assembly. The trace angle control, R104, controls the magnitude and direction of current through the trace angle coil which is wrapped around the forward part of the CRT. This control tilts the trace so that the horizontal sweep may be lined up with the graticule. A second screwdriver adjust control, R103, adjusts the trace astigmatism by controlling the voltage at the A3 electrode of the CRT (Pin 6). The intensity control, R205, adjusts the voltage at the CRT grid (Pin 1) while the focus control, R204, adjusts the voltage of the focus element A2, (Pin 4).

CAUTION

The leads from the focus and intensity pots are at a high negative voltage and constitute a dangerous shock hazard. When troubleshooting, avoid these leads except when measuring their DC voltages with a very high impedance voltmeter capable of measuring over one thousand volts negative.

4-8. POWER SUPPLY ASSEMBLY

The power supply assembly consists of a printed circuit board mounted on the back panel metalwork along with various connectors and power transformers, etc. The power supply assembly may be operated and aligned without the rest of the oscilloscope by plugging a dummy load jig into the Elco pins where the master board normally would connect. The external battery pack plugs into a rear panel connector and is not connected to chassis or signal ground. This allows either floating, plus, or minus grounded batteries to operate the Series PS940 in such applications as operation from a cigarette lighter jack of a vehicle.

4-9. Detailed Operation

The three prong power cord is connected to J201 which grounds the chassis of the PS940 to earth when using a three prong AC outlet. For floating operation, a ground cheater plug must be connected to the power cord. The AC power is connected through fuse F201, power switch S201 and 115-230 volt switch S202 to the power transformer T201. The line fuse is 3AG, 1/4 amp, slo blo, for 115 volt operation. Use 1/8 amp slo blo for 230 volt operation. The electrostatic shield around the primary of the power transformer is connected to chassis ground. The center-tapped secondary voltage is full wave rectified by CR2 and CR3, filtered by C2, to power the constant current, voltage cutoff, battery charger Q1. CR6, CR7, CR8 in combination with R2 and R3, limit the amount of current which may be drawn from Q1. R4 drops that current when charging the battery. CR5 limits the voltage out of the charger. Fuse F1 protects the external battery in case of an internal short on the battery line.

The minus 10 volt regulator is composed of U1, Q2 and Q3. CR9 is the regulator voltage reference and R10 sets the output voltage. The DC to DC converter, composed of Q4, Q5 and T1, switches the regulated 10 volt line and dependent upon the turns ratio of the secondaries, provides ±5 volts, ±7 volts, +37 volts −27 volts, ±65 volts, ±1000 volts and the 6 volt filament square wave. The plus and minus 1000 volts are obtained by doubling the five hundred volt zero to peak square wave of T1 secondary 19-20. U2 and Q6 form a regulator circuit for the minus 1000 volt line to compensate for high voltage changes as the intensity of the trace is changed. R24 is the hi-voltage adjustment. It controls the regulator feedback voltage to U2 pin 3. Inductors L1-L3 isolate the −5 volt and ±7 volt lines from the high frequency noise generated by the converter. Bias for the CRT cathode is provided by CR36.

4-10. MASTER BOARD

The master board distributes power from the power supply board to the horizontal and vertical board assemblies and the required signal interconnections between these later three boards. One control is located on the master board. It is the geometry adjustment which removes pin cushion effect from the CRT display.

4-11. Sweep Magnifier Operation

Sweep magnification only affects circuitry on the Horizontal Board (Refer to schematic 9401062). Magnification of the sweep is achieved by increasing the gain of the horizontal output amplifier (Q15-Q29 and Q32) by a factor of 5. A switch located on the back of the horizontal position control actuates when the horizontal position knob is pulled out. When actuated, the switch (S5) parallels R109 and calibration pot R101 (added components) across the emitter gain setting resistors, R112, R113, R110, R111 of Q21 and Q22. Pushing in the horizontal position knob returns the sweep to the unmagnified normal TIME/DIV rates.

4-12. X-Y Operation (Model PS943 Only)

X-Y operation is achieved by changing the integrated circuit operational sweep amplifier from an integrating configuration to a resistor feedback operational gain amplifier. The X signal is routed through the vertical board trigger amplifier to the horizontal board via the master board. Other switching circuits turn off the trigger comparator, lock out the holdoff one shot, and command the vertical board to pass Ch 2 vertical signals.

The addition of X-Y operation affects circuitry on both the Horizontal and Vertical Input Boards.

a. Horizontal Board (Refer to schematic 9401062)

The sweep switch, S1, in the last two CCW positions connects R156 (54.9K) in feedback around op amp U2. The input resistor is composed of R8 and R9 in series. R9 calibrated the op amp gain in the X-Y function. When U2 is connected as a sweep generator, the DC voltage at pin 6 is about −10V. In the X-Y mode, R158, R150 and R151 feed an offset current into the summing junction of U2 so that its output voltage will operate about −10V. Switch S1 wafer f connects pin 1 of the holdoff one shot, U1, to plus 5V through R19 turning on switches Q30 and Q31. Q30 keeps the holdoff one shot in a clear condition during X-Y operation. Q31 clamps the trigger signal input of comparator U4 to ground turning off all trigger signals.

b. Vertical Board (Refer to schematic 9401024)

In the X-Y mode, one pole of S308 switches plus 7 volts to turn on switches Q5 and Q6. Q5 clamps the collector of Q4 to ground which turns on Ch 2 vertical signal path. The Ch 1 vertical signal path is kept turned off by Q6. The input signal from Ch 1 buffer amplifier U1 is routed through U4 and the other pole of S308 to the trigger amplifier U5. Thus the Ch 1 signal is sent to the horizontal board via the trigger line and the Ch 2 input is coupled to the vertical output amplifier in a normal fashion through the delay line. Placing S308 in the CH 1 or INT 1+2 position restores normal vertical operation.

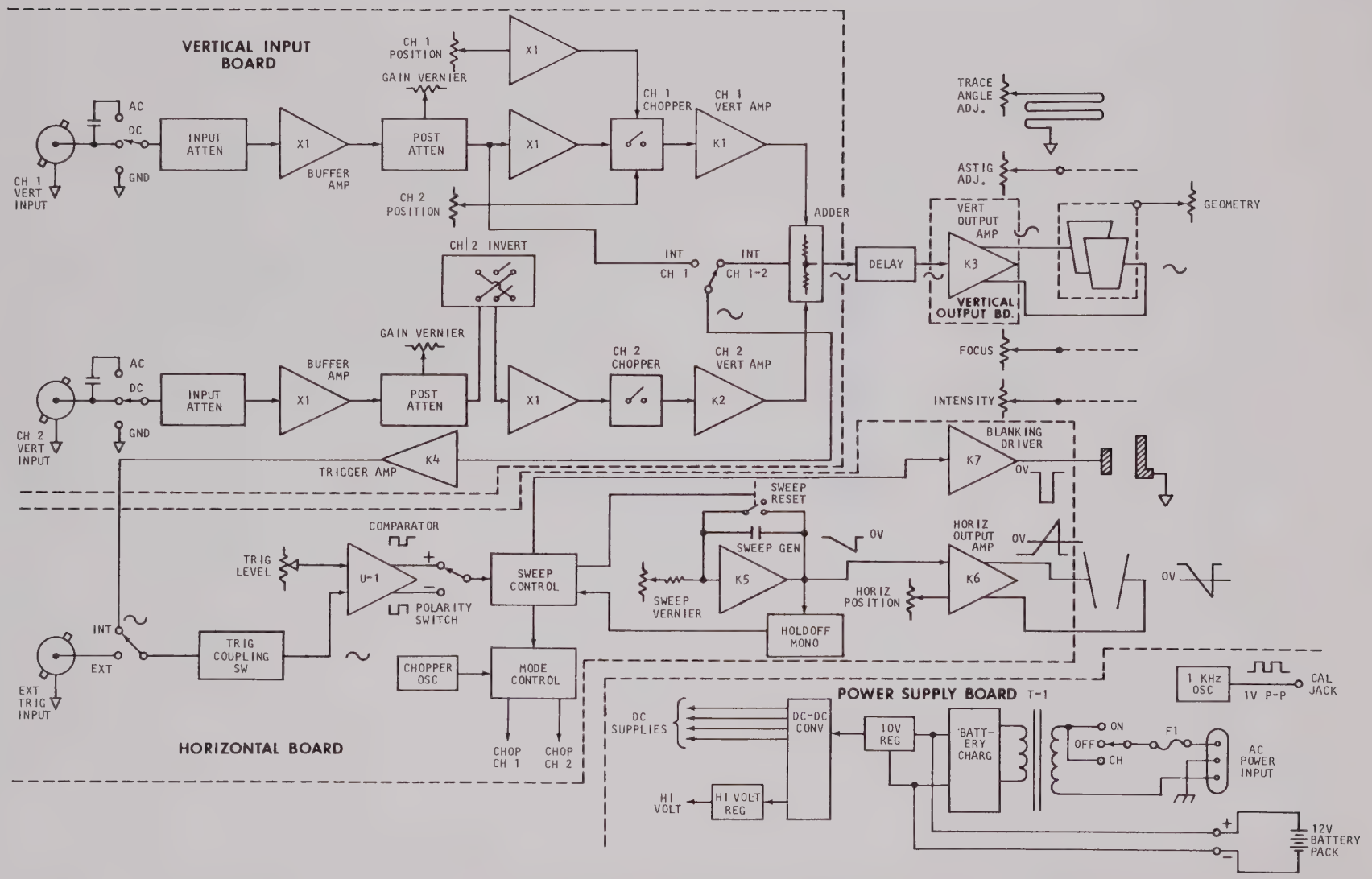

Figure 4-9. Block Diagram

SECTION V

MAINTENANCE

5-1. GENERAL

This section contains information for preventive maintenance, troubleshooting, corrective maintenance and calibration.

5-2. PREVENTIVE MAINTENANCE

Preventive maintenance consists of periodic cleaning, inspection, tightening and recalibration of the oscilloscope. It should be performed on a regular basis to keep the instrument in its best operational and appearance condition.

5-3. Cleaning

Accumulations of dirt, dust and grime should be removed whenever they become noticeable. The frequency of cleaning is largely dependent upon the environment in which the instrument is used. Dirt on the outside covers may be removed with a soft cloth moistened with a diluted household cleaning solution.

CAUTION

Do not use solvents which may attack the paint or plastic parts of the instrument. Chemicals such as MEK, lacquer thinner, or strong acids and alkali may cause paint removal, shorted switches, circuits, etc. and melting of the plastic parts.

Fingerprints on the CRT faceplate should be removed with lens cleaning tissue. Dust accumulated inside the instrument may be blown out with low pressure air.

CAUTION

Whenever the covers are removed from the instrument, make sure that the instrument is unplugged from the AC power line and the battery pack is removed. The interior of the instrument contains high voltage circuits which could be hazardous to your health if the instrument power switch was accidentally turned on during maintenance, with a power source left connected.

5-4. Inspection

After cleaning the instrument, visually inspect the components on the printed circuit boards. Look for components such as resistors which may have become discolored from overheating and for wires having frayed insulation from vibration. A close visual inspection can many times uncover the source of future problems. Removal of the printed circuit boards is not recommended unless a part replacement is indicated.

5-5. Tightening

Front panel knobs and any screws which might have worked loose should be tightened. The black vertical attenuator knobs and the black time-per-division knob may be tightened by first removing the red vernier knob and using a one quarter inch deep socket to tighten the black knobs. The other knobs are tightened with a small screwdriver. A drop of rubber cement is helpful in retaining the plastic knob end caps.

After many insertions and removals, the printed circuit board Elco pins have a tendency to spread. These may be tightened by removing the board and squeezing the pins with needlenose pliers. Care in board removal will prevent pin spreading.

5-6. Recalibration

Recalibration of the instrument atregularly scheduled intervals will assure that measurements made will be within the accuracy specifications. It is recommended that the instrument be recalibrated after 1000 hours of operation, or twice a year if the instrument is used infrequently. The calibration procedures are provided in the latter part of this section of the manual. If electronic parts, such as resistors and integrated circuits have been replaced during the preventive maintenance procedures, recalibration should be performed to return the instrument to specifications.

5-7. TROUBLESHOOTING

The troubleshooting section contains the following: precautions to be used when troubleshooting, parts identification, soldering precautions and PC board handling, troubleshooting techniques and individual board troubleshooting. The modular, plug-in, printed circuit board construction of the instrument makes it simple to isolate the problem and replace the defective part. Standard off-the-shelf components are used throughout the instrument and replacements parts may be obtained through your local supplier instead of waiting for a part from Vu-data Corp. However, care should be taken that the replacement part is an exact substitute, so that performance and calibration difficulties may be avoided.

5-8. Troubleshooting Precautions

WARNING

Before removing the covers for troubleshooting, read and observe the precautions given below. The instrument contains a hard vacuum cathode ray tube and potentially lethal high voltages, which may become hazardous if not handled properly.

1. Always remove the line cord and battery pack from the instrument before removing the covers.

2. Wear "safety" goggles with side shields when handling the CRT to prevent possible injury from flying glass in case of tube breakage. When removing the CRT from the tube shield,

be very careful of the tube tip located in the center of the tube socket. Do not strike or scratch the CRT and never subject it to more than moderate pressure when installing in, or removing from the instrument.

3. When operating the instrument with power on, and covers off, avoid contact with any of the high voltage pins on the power supply board and horizontal board. Especially avoid contact with the intensity pot when handling the instrument. Avoid touching any leads from the AC line connector through the fuse and power switch.

4. Avoid shorting power supplies.

5. Do not unplug any board with power on.

6. Avoid shorting transistor leads to ground or power supplies. It may destroy the transistors.

7. Avoid shorting integrated circuit leads, since it may damage them.

8. When operating the power supply without a load, filter capacitors will charge up, causing voltages to remain after power has been turned off.

9. Operating the power supply removed from the rest of the instrument, by using the extender cable, the shock hazard is greater due to more exposed Elco pins. USE DUE CAUTION!

10. When using the extender cable, make sure the interconnection is made on a 'pin-A to pin-A' etc. basis. Otherwise, the wrong voltages may occur at improper places causing damage.

11. With a battery pack attached to the instrument, do not consider the instrument to be "dead" when the line cord is pulled.

5-9. Parts Identification

In the Parts List, each part is identified by a drawing reference designator, manufacturer part number, description of part, manufacturer and Vu-data part number. When ordering replacement parts from Vu-data, be sure to include the Vu-data part number for ease of identification.

5-10. Resistor Identification

a) Composition Resistors

Standard EIA resistor color code applies, with bands 1 and 2 being the first two significant figures, band 3 is the multiplier and band 4 is the tolerance.

Black	0	Blue	6
Brown	1	Violet	7
Red	2	Gray	8
Orange	3	White	9
Yellow	4	Silver	10%
Green	5	Gold	5%

b) Precision Metal Film Resistors

Bands 1, 2 and 3 are the first three significant figures, and band 4 is the multiplier. Band 5 is the tolerance, and is usually brown, indicating 1%. Some mil spec resistors do not use a color code, but write the value on the body of the resistor.

5-11. Capacitor Identification

Film, electrolytic and ceramic capacitors have their capacity and voltage rating written on them. Dipped silver mica capacitors are identified by writing either in a mil spec callout (such as CM05FD270J03, a 27 pf 5% capacitor) or a commercial callout (such as 27 5%). Dipped tantalum capacitors are identified in two ways, depending on manufacturer and case size.

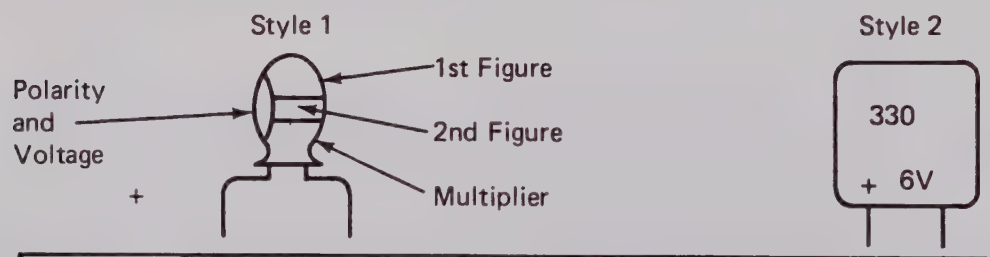

COLOR	1st FIGURE	2nd FIGURE	MULTIPLIER	VOLTAGE
		In PicoFarads		
Black	0	0	None	3-4
Brown	1	1	X10	3-6
Red	2	2	$X10^2$	3-10
Orange	3	3	$X10^3$	3-15
Yellow	4	4	$X10^4$	3-20
Green	5	5	$X10^5$	3-25
Blue	6	6	$X10^6$	3-35
Violet	7	7	$X10^7$	3-50
Gray	8	8	None	---
White	9	9	None	---

Table 5-1. Dipped Tantalum Capacitor Marking

5-12. Diode Marking

Diodes are marked in three different ways. The cathode end is generally indicated by a band closest to the cathode lead. Some diodes have their identification number written on the side, others use colored bands like carbon resistors, while others only identify the cathode. The latter type of diodes will require reference to the schematic or Parts List for positive identification.

5-13. Transistor Identification

The transistor lead configurations are varied as to type. When in doubt, refer to Table 5-2.

D44H2	
2N3694 2N4275	
2N5401 MPSH54 2N3904 2N5550 2N3906 MPSH04	
MPSH34	
2N4870	
UC410	
FD1673	

Table 5-2. Transistor Lead Identification

5-14. Integrated Circuit Identification

Six different integrated circuit packages are used in the instrument. Their pin configurations are shown below in bottom view.

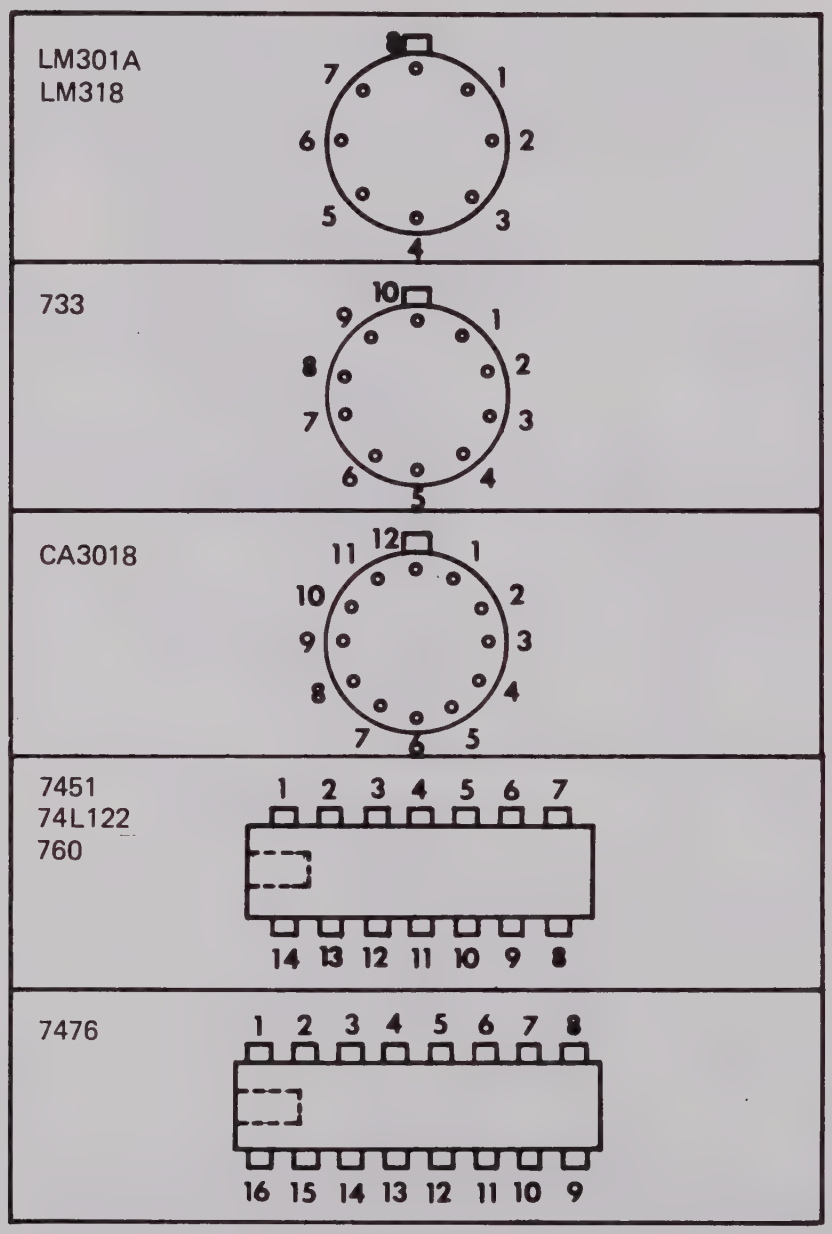

Table 5-3. IC Lead Identification

5-15. Soldering Precautions

Since the solid state components may be damaged by excessive heat, do not use a soldering iron of greater than 50 to 75 watts. Do not keep the iron tip to the solid state lead for greater than five seconds. If greater time is required, let the lead cool off before reapplying the iron. Use only resin core 60/40 solder. Never use an acid core solder. When removing components from a printed circuit board, use a solder sucking device to remove the solder from the pad. On double sided boards, remove the solder from both sides and make sure the hole is free from solder. Excessive force will sometimes remove the plating from plated through holes. Be sure to solder top and bottom of the board to assure a through connection. Clean the resin from the board with alcohol or a flux remover. Cleaned, repaired boards should be sprayed with a clear acrylic finish to moisture proof the board. When spraying, do not allow the spray to hit the wafer switches or Elco pins, as an open circuit may result. Parts replacement in many cases will require recalibration. If a pad or strap becomes lifted when removing a part, use the component lead to cinch the pad to the board before resoldering. Badly lifted straps should be replaced with wires.

CAUTION

Use a low wattage iron and speedy soldering techniques to avoid lifting pads and straps. A good solder removal tool is essential for parts replacement. Use enough heat to avoid "cold" solder joints.

5-16. Troubleshooting Techniques

WARNING

Whenever the instrument covers are removed, high voltages with exposed pins are present. A possible lethal shock could result from touching high voltage connections.

If the instrument is not operating, start with line cord and make sure it is fully plugged into the instrument and to an active AC power plug. Next, check the AC line fuse and replace, if open. Make sure that the power switch is in the ON position and not in CHG. Improper setting of the front panel controls can give the appearance of faulty operation. Check each control setting and make sure that the sweep and vertical attenuator controls are set for an on screen display.

If the preceding checks do not correct the problem, unplug the instrument and remove the battery pack. Then remove the top and bottom covers. Connect the power cord and turn the power switch to ON. Be careful of exposed high voltage points. Note the front panel power on light. If it is not on, the DC to DC converter is not running. A faint 10KHz audible sound should be heard with the covers off, provided the converter is operating properly. The power supply voltages may be checked with a DC voltmeter at the printed circuit board pins.

Most troubles with the instrument may be traced to mechanical problems, (such as open connector pins, or broken wires), or defective semiconductors. Isolation of the defective part should be done in a systematic manner, starting with the power supply and proceeding to the CRT.

5-17. Circuit Board Troubleshooting

The CRT display can be used to pinpoint the source of many troubles. A sweep with no vertical deflection indicates a trouble on either the vertical input or output boards. Conversely, no sweep with vertical deflection indicates a problem with the horizontal board. Visible retrace indicates a blanking circuit problem. If working spare boards are available, substituting boards will quickly isolate the problem to a board. Signal tracing is then used to locate the defective part.

An extender board may be used to aid in signal tracing the back side of the horizontal board and vertical input board. The extender board may also be connected between the power supply assembly and the rest of the instrument to aid in troubleshooting the vertical output board and power supply board.

5-18. CORRECTIVE MAINTENANCE

The modular, plug in printed circuit board assembly configuration of the instrument allows first level corrective maintenance to be made by replacing defective assemblies. These assemblies are as follows:

(a)	Power Supply Assembly	9405027
(b)	Horizontal Module Assembly	9405061
(c)	Vertical Module Assembly	9405020
(d)	Display Assembly	9405029
(e)	External Battery Assembly	9405046

Together they form a complete instrument. If a complete power supply with its switches and metalwork etc. is not required, the power supply sub-assembly, 9405028, is available. This consists of the printed circuit board, complete with active components and DC to DC converter. It does require soldering of leads to install it in a power supply assembly. A vertical output sub-assembly, 9405031, is available which contains the vertical output board and parts. It also requires soldering for installation.

Individual components are generally "off the shelf" and available at local suppliers or may be ordered from Vu-data Corp. When ordering from Vu-data, be sure to include the six digit Vu-data part number. If other parts are substituted, make sure that the part is a direct replacement, or performance and calibration difficulties may result.

Refer to Figures 5-1 thru 5-7 for the location of test points, calibration controls and pin identification. A thorough understanding of the theory of operation section is a valuable aid in tracing signals through the various circuits.

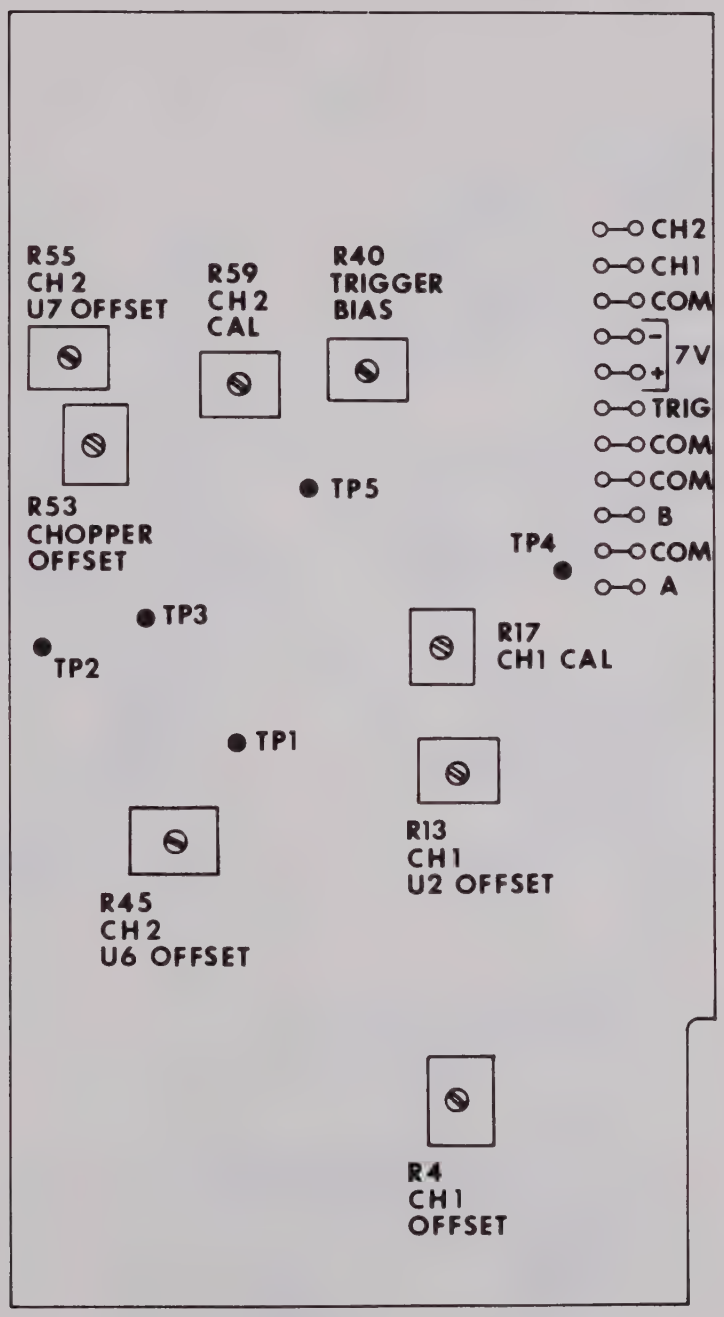

Figure 5-1. Vertical Input Board Adjustment Locations

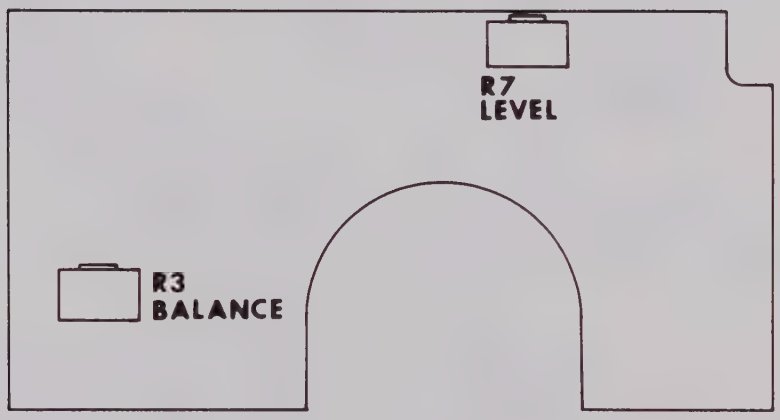

Figure 5-2. Vertical Output Board Adjustment Locations

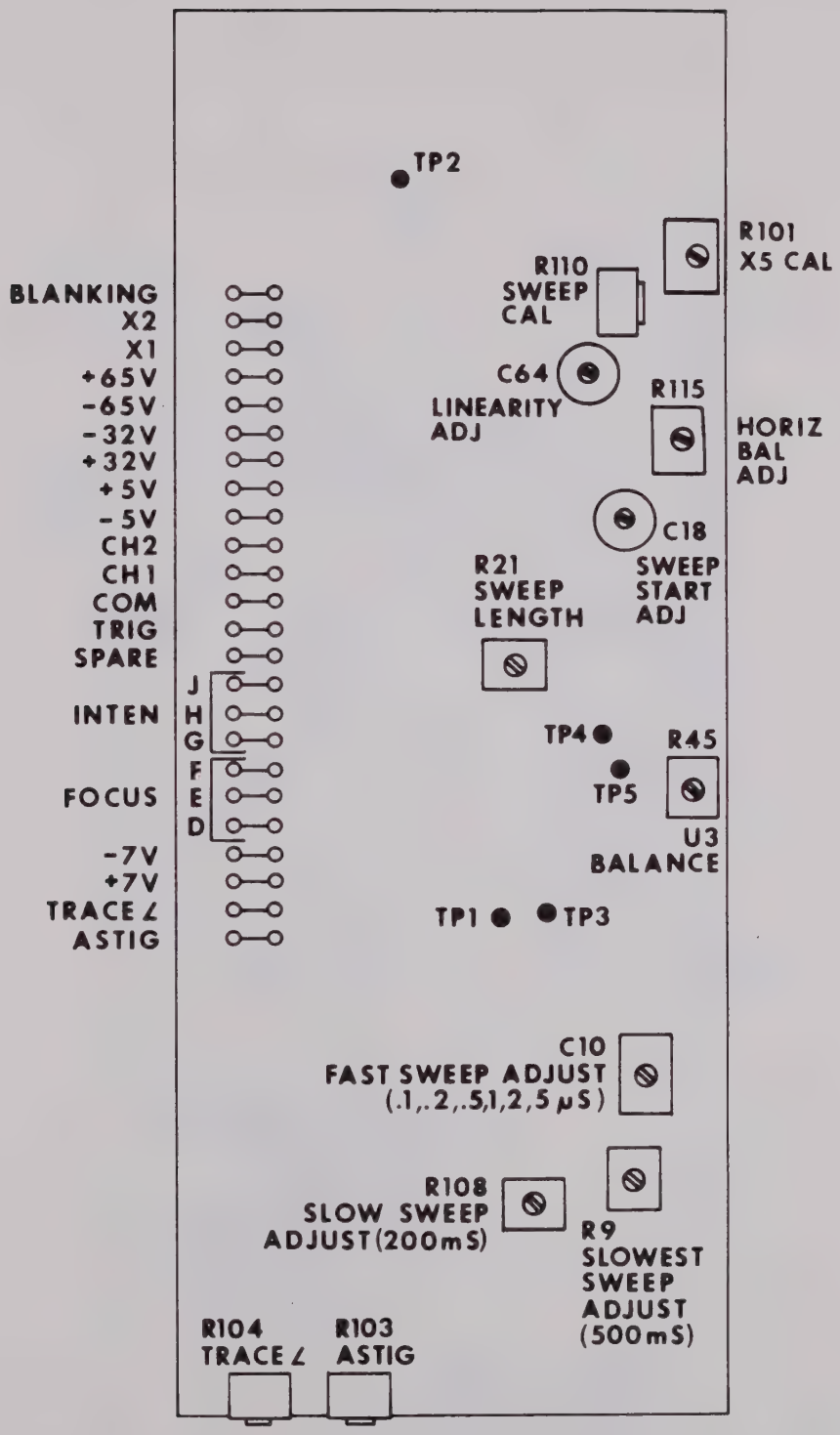

Figure 5-3. Horizontal Board Adjustment Locations (Model PS941)

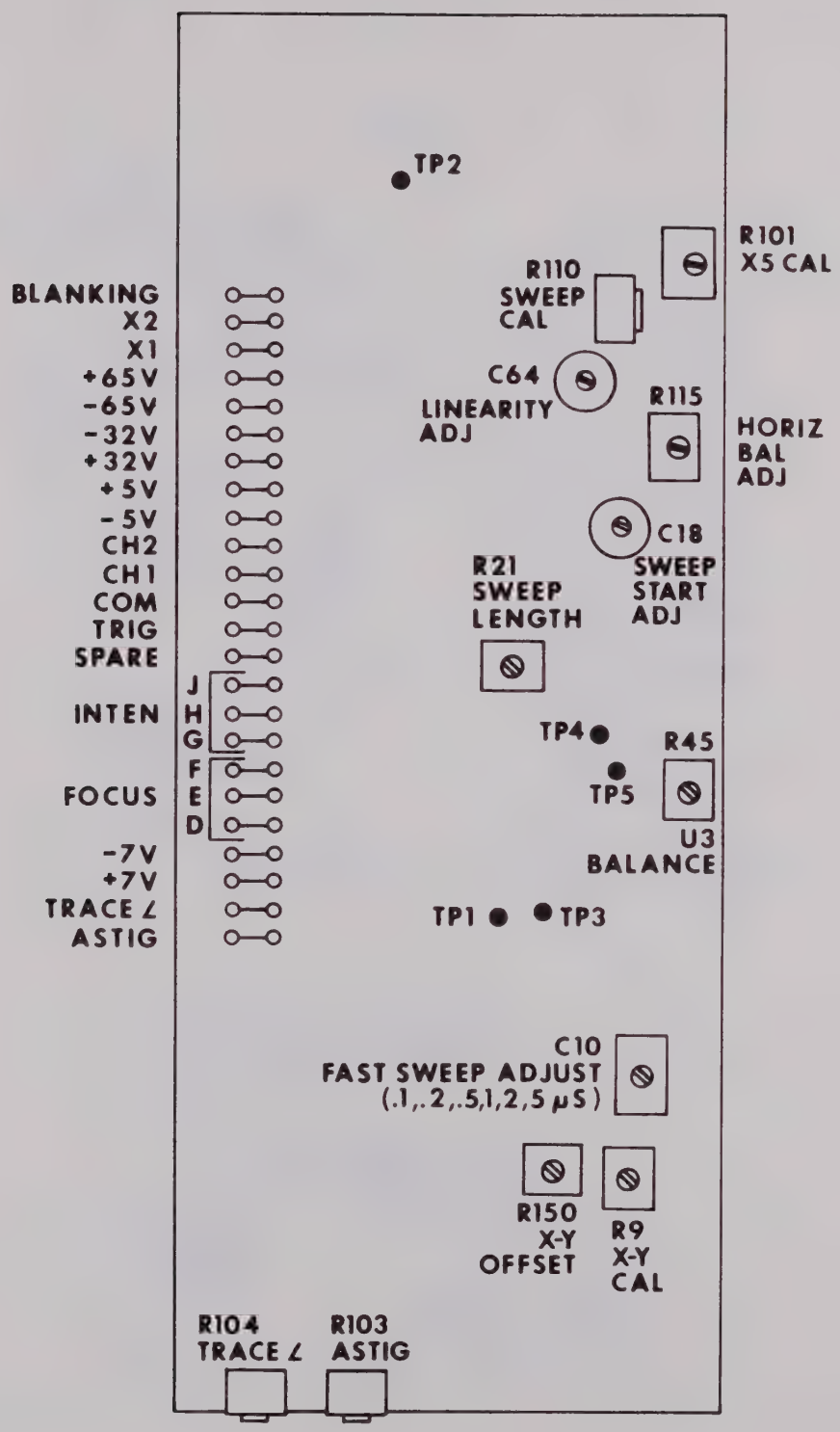

Figure 5-4. Horizontal Board Adjustment Locations (Model PS943)

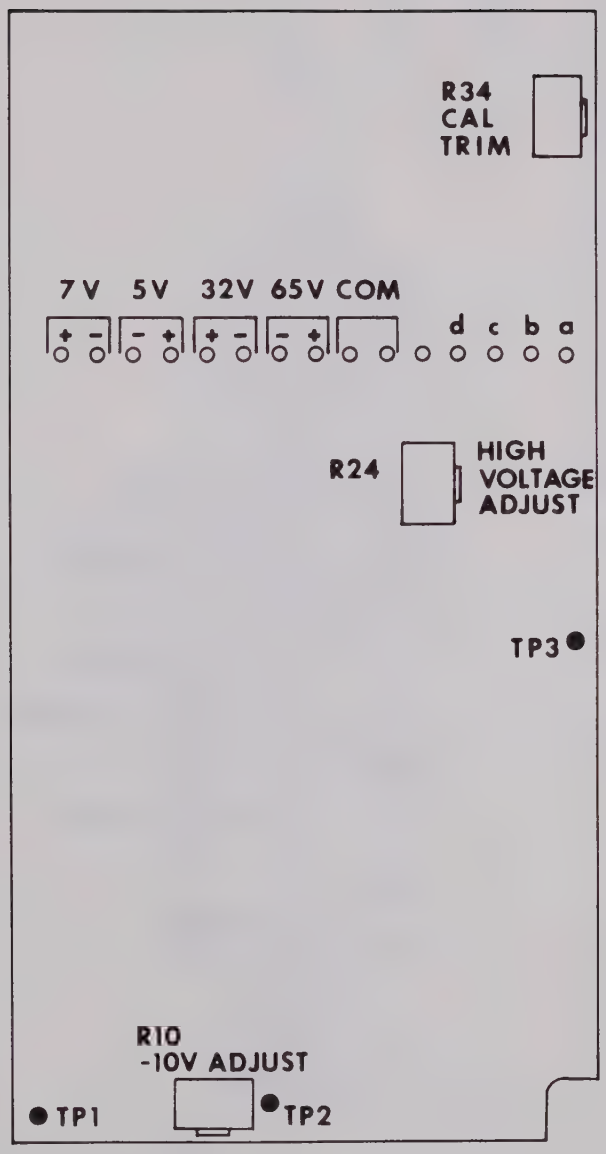

Figure 5-5. Power Supply Board Adjustment Locations

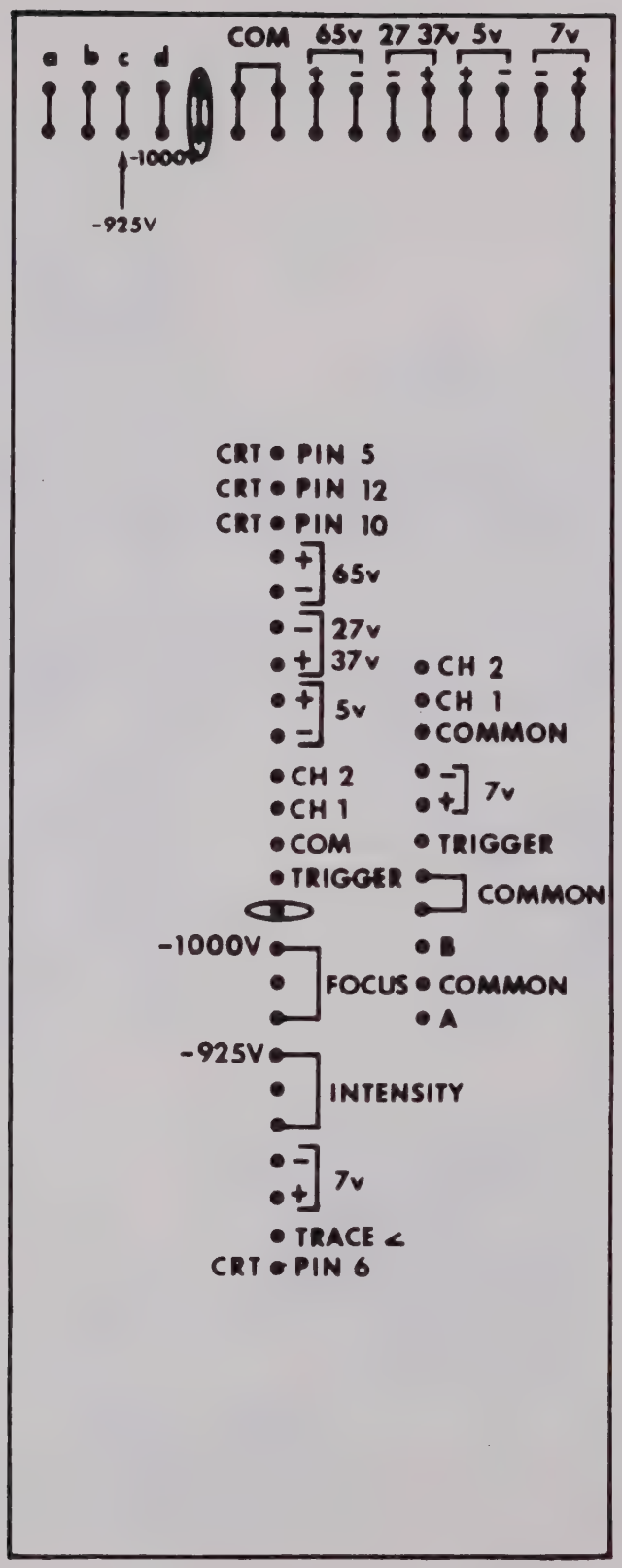

Figure 5-6. Master Board Adjustment Location

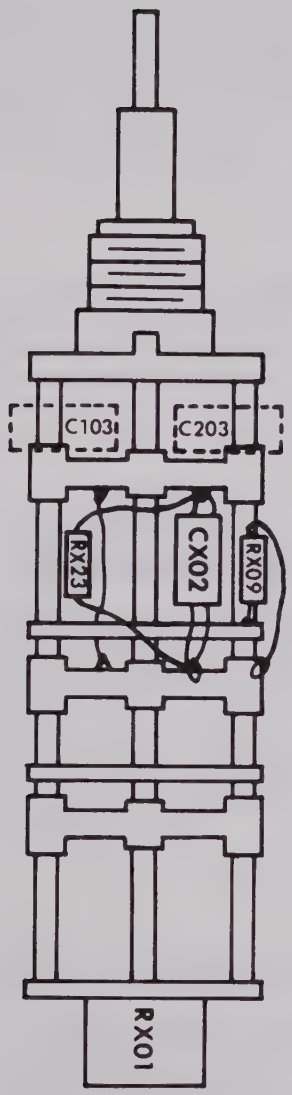

Figure 5-7. Vertical Switch Adjustment Locations

CAUTION

Understand the troubleshooting precautions before attempting to repair or service the instrument. Serious damage to yourself and/ or the instrument may result from failure to follow the precautions. When in doubt, contact your local Vu-data representative.

5-19. CALIBRATION

The following procedure provides the information necessary for technical personnel to align and calibrated the PS941 and PS943 Oscilloscopes. The alignment should be accomplished at regular periodic intervals to insure the proper operation of the instrument. Since the power supply affects the calibration of the other circuits, it should be calibrated prior to the other sections.

WARNING

When performing instrument calibration, the top and bottom covers must be removed. High voltages, which could be lethal, are accessible and extreme caution should be taken. Screw-drivers with insulated shafts should be used for setting the adjustments. The power should be off while the covers are being removed or installed.

5-20. Test Equipment Required

The following test equipment is required to calibrate the instrument. Substitutions may be made provided the specifications of the substituted equipment is equal or better than the listed equipment.

1. Function Generator — Wavetek Model 180
2. Digital Multimeter — Vu-data Model 975
3. Time-Mark Generator — Tektronix Model TG501
4. Calibrated Amplitude Pulse Generator — Tektronix Model PG506

5-21. Location of Alignment Adjustments

Figures 5-1 and 5-2 show the location of alignment adjustments for the Vertical Input Board Sub-Assembly and Vertical Output Board Sub-Assembly respectively. The Horizontal Board Sub-Assemblies alignment adjustments for both PS941B and PS943B models are shown on Figures 5-3 and 5-4. Figures 5-5 and 5-6 show the alignment adjustments for the Power Supply and

Master Board Sub-Assemblies. Finally, the alignment adjustments for the Vertical Switch Sub-Assembly are shown on Figure 5-7.

5-22. Initial Control Settings

With AC line cord unplugged, remove the battery pack and the 8 pan head and 2 flathead screws mounting the top and bottom covers and rear extrusions. Check that you can slide the top or bottom cover open to make the calibration adjustments, but leave them on the scope to hold the unit at the proper operation temperature. Turn off the INTENSITY CONTROL, plug in the line cord, turn the POWER SWITCH on, and allow to run until inside temperature has stabilized.

Set the front panel controls as follows:

1.	INPUT COUPLING	CH1	AC	CH2	GND
2.	VERTICAL SENSITIVITY SW	CH1	.01V	CH2	.01V
3.	CH 2 POLARITY SW	NORMAL			
4.	TRIGGER SELECT SW	INT 1 & 2			
5.	DISPLAY MODE SW	ADD			
6.	TRIGGER SOURCE SW	INT			
7.	TRIGGER POLARITY SW	–			
8.	TRIGGER MODE SW	AUTO			
9.	SWEEP RATE SW	.2 MSEC/DIV			
10.	VERTICAL AND HORIZONTAL VERNIERS	CAL			
11.	VERTICAL AND HORIZONTAL POSITION	MID-RANGE			
12.	FOCUS	MID-RANGE			

CAUTION

A constant trace with maximum intensity may burn the phosphor coating on the cathode ray tube. The warranty on the C.R.T. does not cover phosphor burns.

5-23. Power Supply Calibration

If the instrument is operating and is being re-calibrated, all cal pots can be left at their present setting. If a component in series with a pot has been repaired or replaced, the pot should be given an initial setting of mid-range.

Connect the function generator to CH1 INPUT. Set it for a 2KHz, 60 MV sine wave, adjust FOCUS, ASTIGMATISM and INTENSITY for a sharp display.

Connect the multimeter between ground and +5 elco pins on the horizontal board, and adjust R10 on the power supply board for +5.03V ± 10 MV.

Turn INTENSITY off, and connect multimeter high to TP 3 on power supply board. Adjust R24 on power supply board for −10V ± 2V. Rotate INTENSITY on slowly and check that the voltage at TP3 increases to about −40V. Return control for a sharp display.

5-24. Vertical Output Amp Calibration

Connect the function generator to CH1 and set it for a 50 KHz, 8 DIV sine wave. Adjust R7 on the vertical output amplifier board for maximum amplitude. Vary CH1 POSITION to move the display up and down, and adjust R3 so the display can be positioned off screen both top and bottom.

5-25. Vertical Calibration

Switch CH1 SENSITIVITY between 1V and .5V and adjust R4 for no offset between the two switch positions. Switch CH2 SENSITIVITY between 1V and .5V and adjust R45 for no offset between the two switch positions.

Switch DISPLAY MODE to CH1. Connect multimeter high to the arm of CH1 POSITION pot (R327) and adjust it for 0V ± .001V.

Connect multimeter high to TP4, low to elco pin A and adjust R13 for 0V ± .005V.

Connect the multimeter high to TP5, low to elco pin B and adjust R53 for 0V ± .005V. Switch DISPLAY MODE to CH2. Adjust R55 for 0V ± .005V. Balance the adjustment of R53 and R55, setting R53 in CH1 position, and R55 in CH2 position of DISPLAY MODE SWITCH.

NOTE

For best accuracy, the covers should be on when not actually making adjustments to keep the temperature stable.

Set DISPLAY MODE to ADD. Set CH1 and CH2 SENSITIVITY to 1V/DIV, CH1 and CH2 COUPLING to AC. Connect a calibrated 4VPP 1 to 2 KHz square wave to CH1 INPUT.

Adjust CH1 POSITION to place the square wave in the center 4 divisions of the screen. Adjust R17 for exactly 4 divisions. Connect the square wave to CH2 INPUT. Center with CH1 POSITION, and adjust R59 for exactly 4 divisions.

Set CH1 and CH2 COUPLING to GND. Set TRIGGER SELECT to INT CH1, DISPLAY MODE to CH1. Connect multimeter high to elco pin TRIG, low to ground. Read the voltage, then switch TRIGGER SELECT to INT 1 + 2 and adjust R40 for the same voltage.

Set DISPLAY MODE to ADD. Set CH1 and CH2 COUPLING to AC. Connect a 4 VPP 2KHz square wave to CH1 and adjust C102 on the attenuator for no over or under shoot on the display. Connect the square wave to CH2 and adjust C202 on the attenuator for no over or under shoot on the display.

Connect a 10:1 probe to CH1; set CH1 SENSITIVITY to .5V/DIV and connect the probe to a 2 KHz square wave about 6 divisions high. Compensate the probe for best response. Switch to 1V/DIV, and adjust C103 on the attenuator for best response.

Connect the probe to CH2, set CH2 SENSITIVITY to .5V/DIV, and compensate the probe for best response. Switch to 1V/DIV and adjust C203 on the attenuator for best response.

5-26. Horizontal Calibration

Set the time mark generator for 1 msec markets and connect to CH1. Set TRIGGER MODE to DC and adjust TRIGGER LEVEL for a stable trace. Set the SWEEP RATE switch to 1 msec/div and adjust HORIZONTAL POSITION to align the time marks with the vertical graticule lines. Adjust R110 to achieve 10 time marks on the 10 graticule lines.

Switch the generator to .2 mSec, set the SWEEP RATE switch to .2 mSec and check calibration. If necessary, readjust R110 to balance between the 1 mSec and .2 mSec ranges.

Adjust R21 to give a total sweep length of 12 time marks.

Select the .2 mSec time mark, set the SWEEP RATE switch to 1 mSec, and pull the X5 EXPANDER. Adjust R101 for 1 mark per graticule line.

a. Depress the X5 EXPANDER, select the 1 μSec time mark, and set SWEEP RATE to 1 μSec Adjust C10 for 1 mark per graticule line.

b. Select the .1 mSec time mark and set SWEEP RATE to .1 mSec. Adjust C64 for 1 mark per graticule line.

Alternate between steps a. and b. as necessary.

Select the .1 mSec time mark, set SWEEP RATE to 2 mSec, and adjust HORIZONTAL POSITION so that the left edge of the display is completely visible. Adjust C18 so that the left edge of the display is moved to the right as much as possible.

Set the SWEEP RATE to .1 mSec and pull the X5 EXPANDER. Adjust R115 to optimize the display horizontal linearity as the display is positioned with the HORIZONTAL POSITION control.

5-27. PS941 Slow Sweep Calibration

Select the 200 msec time mark. Set the SWEEP RATE switch to 200 msec, and adjust R108 for 1 mark per graticule line.

Select the 500 mSec time mark, set SWEEP RATE to 500 msec, and adjust R9 for 1 mark per graticule line.

5-28. Trigger Balance Calibration

Set the time mark generator to .1 mSec and the SWEEP RATE switch to .1 mSec. Set the TRIGGER MODE to AUTO and TRIGGER SELECT to INT CH1.

Switch CH1 VERTICAL SENSITIVITY to 2V/DIV. If necessary, adjust R45 on the horizontal board for a stable trace. Reduce the amplitude of the display with the CH1 vernier and re-adjust R45 until the smallest stable display is achieved. Switch back to INT 1 + 2 and if trace is not stable, balance between INT CH1 and INT 1 + 2.

5-29. PS943 X-Y Calibration

Set the function generator for a 1 KHz sine wave and use a tee connector to connect it to CH1 and CH2. Set both VERTICAL SENSITIVITY switches to .5 V/DIV, VERNIERS in CAL position. Set all front panel switches to the X-Y mode and adjust the amplitude of the input signal for 8 divisions vertically. Set HORIZONTAL POSITION so the trace intersects the center of the graticule. R150 may have to be adjusted to accomplish this. Adjust R9 for 8 divisions of horizontal deflection.

Switch SWEEP RATE to 2 mSec/DIV and adjust HORIZONTAL POSITION so the sweep starts at the left edge of the graticule. Switch SWEEP RATE back to X-Y and adjust R150 so the trace passes through the center of the graticule.

5-30. Probe Calibrator Adjustment

Switch SWEEP RATE to .2 mSec/DIV. Connect a probe to CH1 and to the probe cal jack on the rear panel. Set the VERTICAL SENSITIVITY to .02 V/DIV and adjust R34 on the power supply for a 5 DIV. high signal.

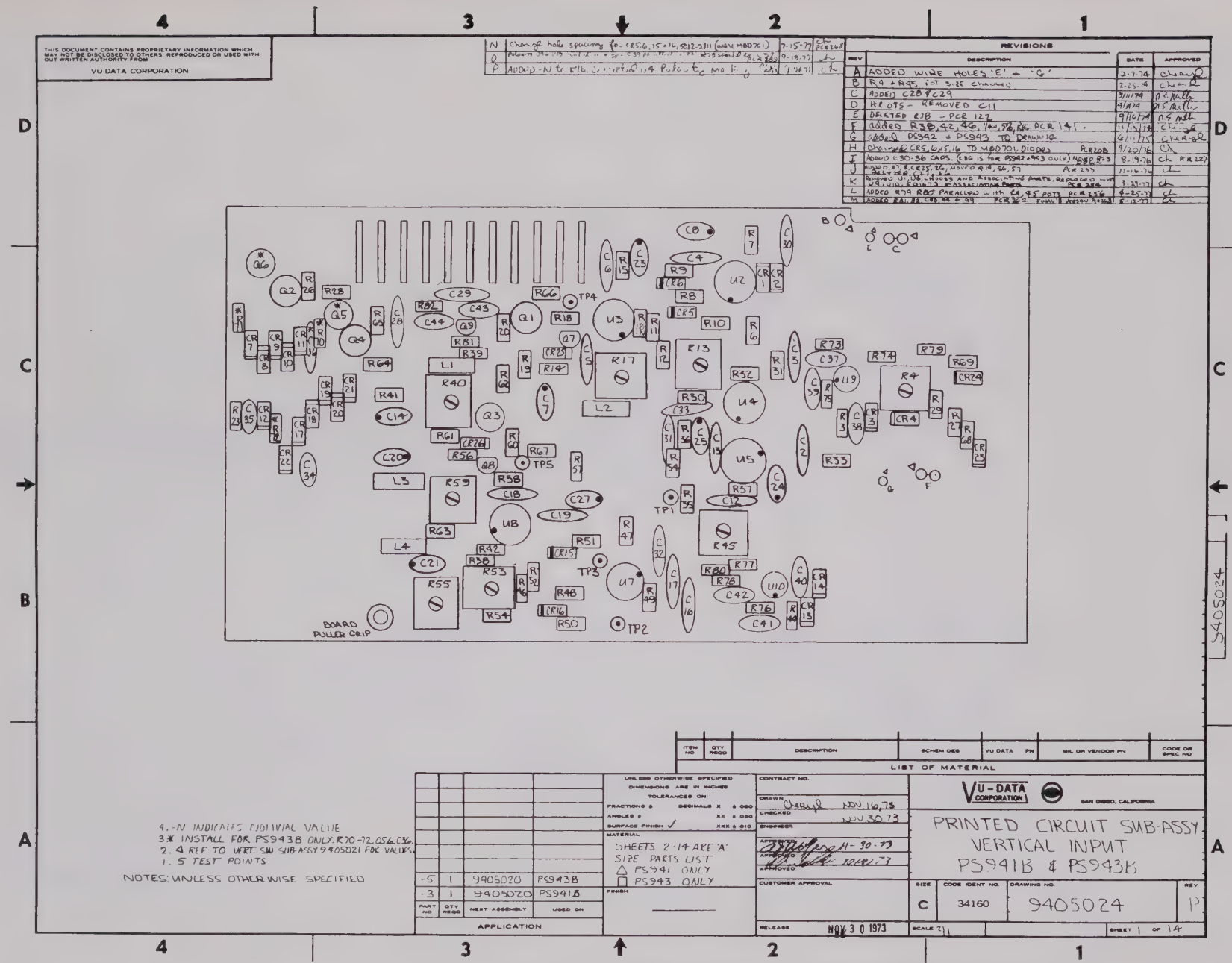

Figure 5-8. Parts Location for Vertical Input Board Sub-Assembly

9405031 B

DOCUMENT CONTAINS PROPRIETARY INFORMATION WHICH NOT BE DISCLOSED TO OTHERS, REPRODUCED OR USED WITH WRITTEN AUTHORITY FROM
VU-DATA CORPORATION

REVISIONS

REV	DESCRIPTION	DATE	APPROVED
A	added C11, .01, 150V CAP.	11/12/74	[illegible]
B	Changed CR1 + 2 TO MB0701 DIODES PCR208	4/20/76	[illegible]
B	Showed terminal to be added [illegible] Cable Point "A" No Pin	11-29-77	[illegible]

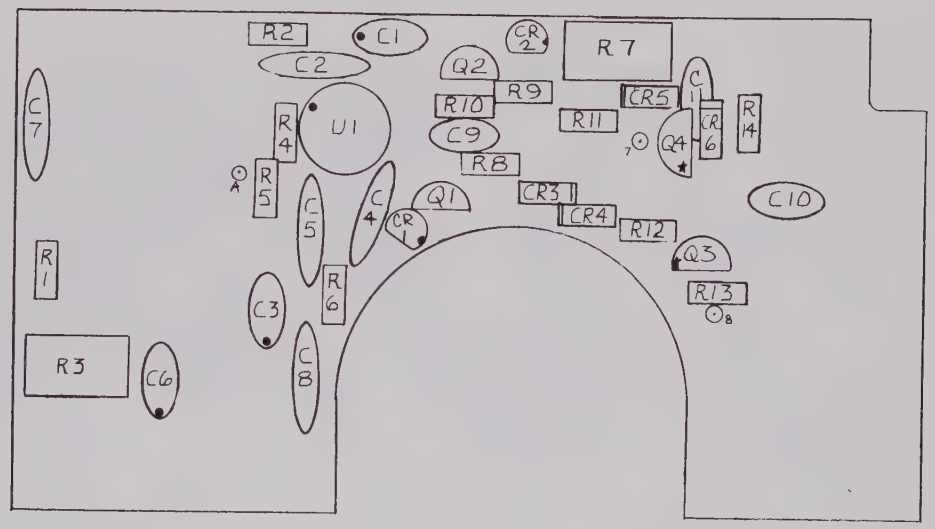

NOTES:
1- • INDICATES POLARITY
2- ✱ INDICATES FERRITE BEAD
3- ⊙ INDICATES TERMINAL (3)

ITEM NO.	QTY REQD	DESCRIPTION	SCHEM DES	VU-DATA PN	MIL OR VENDOR PN	CODE OR SPEC NO.

LIST OF MATERIAL

PART NO.	QTY REQD	NEXT ASSEMBLY	USED ON
-1	1	9405029	PS9438
-1	1	9405029	PS9413

APPLICATION

UNLESS OTHERWISE SPECIFIED DIMENSIONS ARE IN INCHES
TOLERANCES ON:
FRACTIONS ± DECIMALS .X ±.050
ANGLES ± .XX ±.030
SURFACE FINISH ✓ .XXX ±.010

MATERIAL
SEE SEPARATE PARTS LIST 9405031

FINISH

CONTRACT NO.
DRAWN N. E. Miller 11/12/73
CHECKED 11/26/73
ENGINEER
APPROVED [illegible] 11-30-73
APPROVED [illegible] 30 NOV 73
APPROVED
CUSTOMER APPROVAL
RELEASE NOV 30 1973

VU-DATA CORPORATION
SAN DIEGO, CALIFORNIA

PRINTED CIRCUIT SUB-ASSY.
VERTICAL OUTPUT
PS940b

SIZE	CODE IDENT NO.	DRAWING NO.	REV
B	34160	9405.03	B

SCALE 2/1
SHEET 1 OF 1

Figure 5-9. Parts Location for Vertical Output Board Sub-Assembly

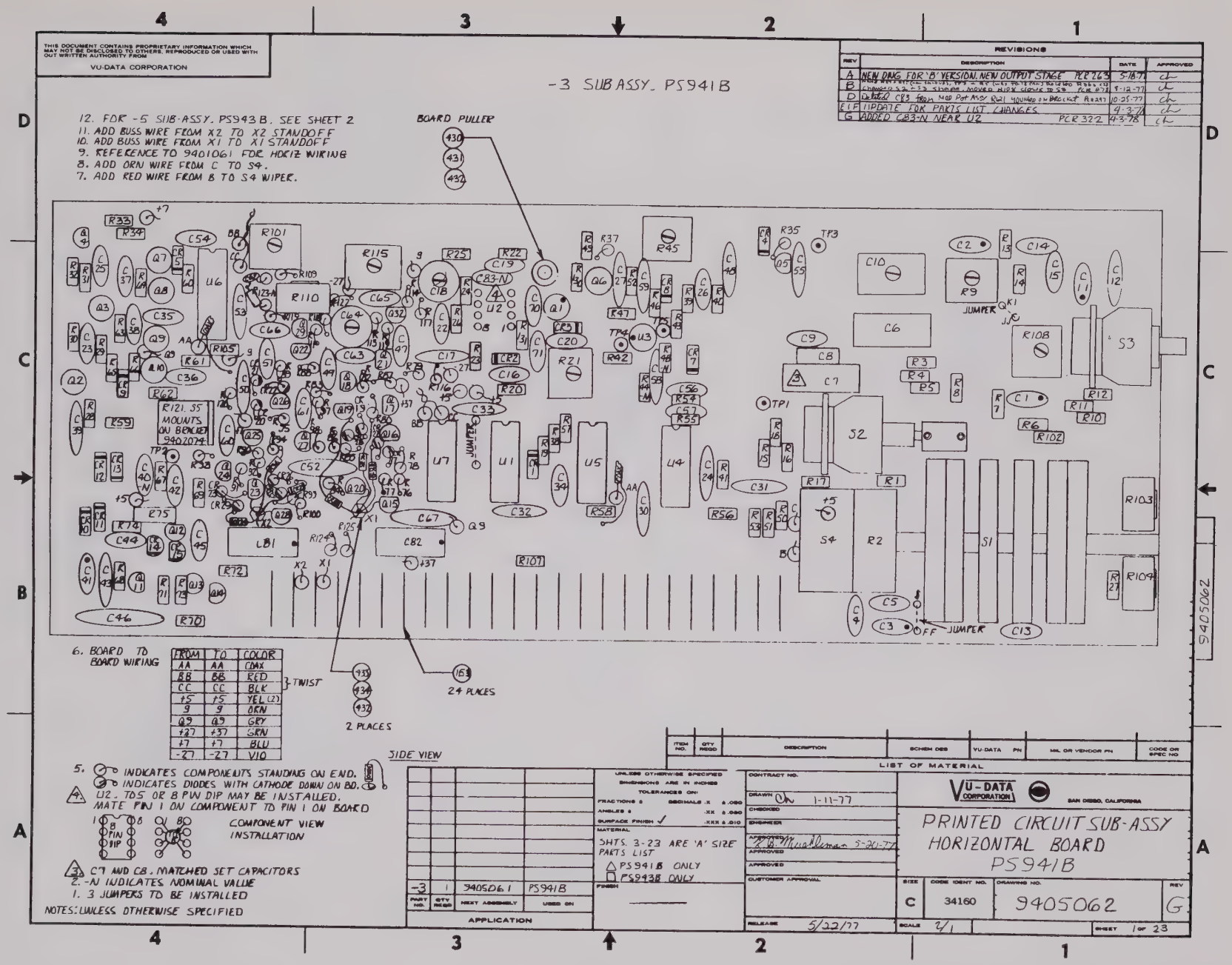

Figure 5-10. Parts Location for Horizontal Board Sub-Assembly (Model PS941)

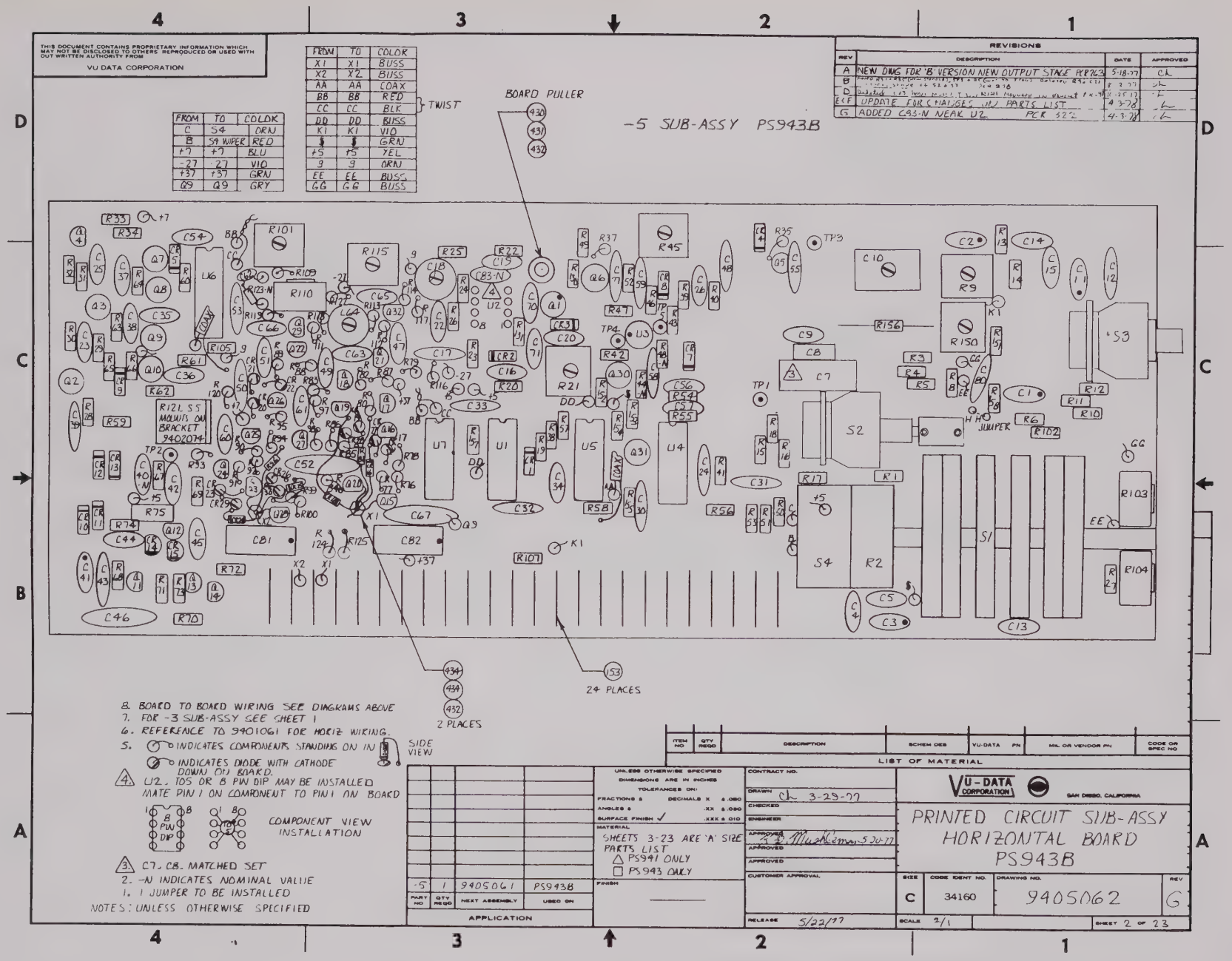

Figure 5-11. Parts Location for Horizontal Board Sub-Assembly (Model PS943)

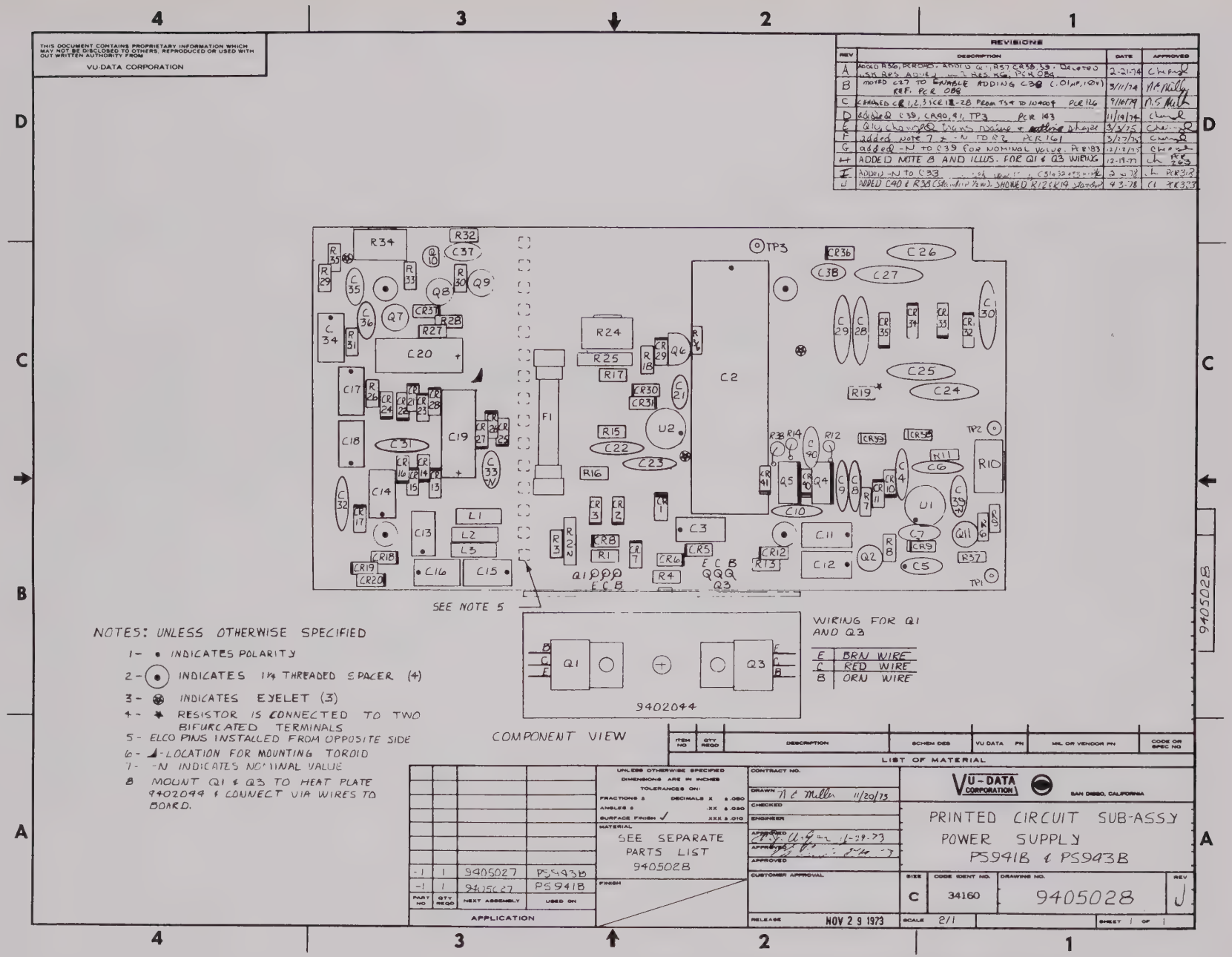

Figure 5-12. Parts Location for Power Supply Board Sub-Assembly

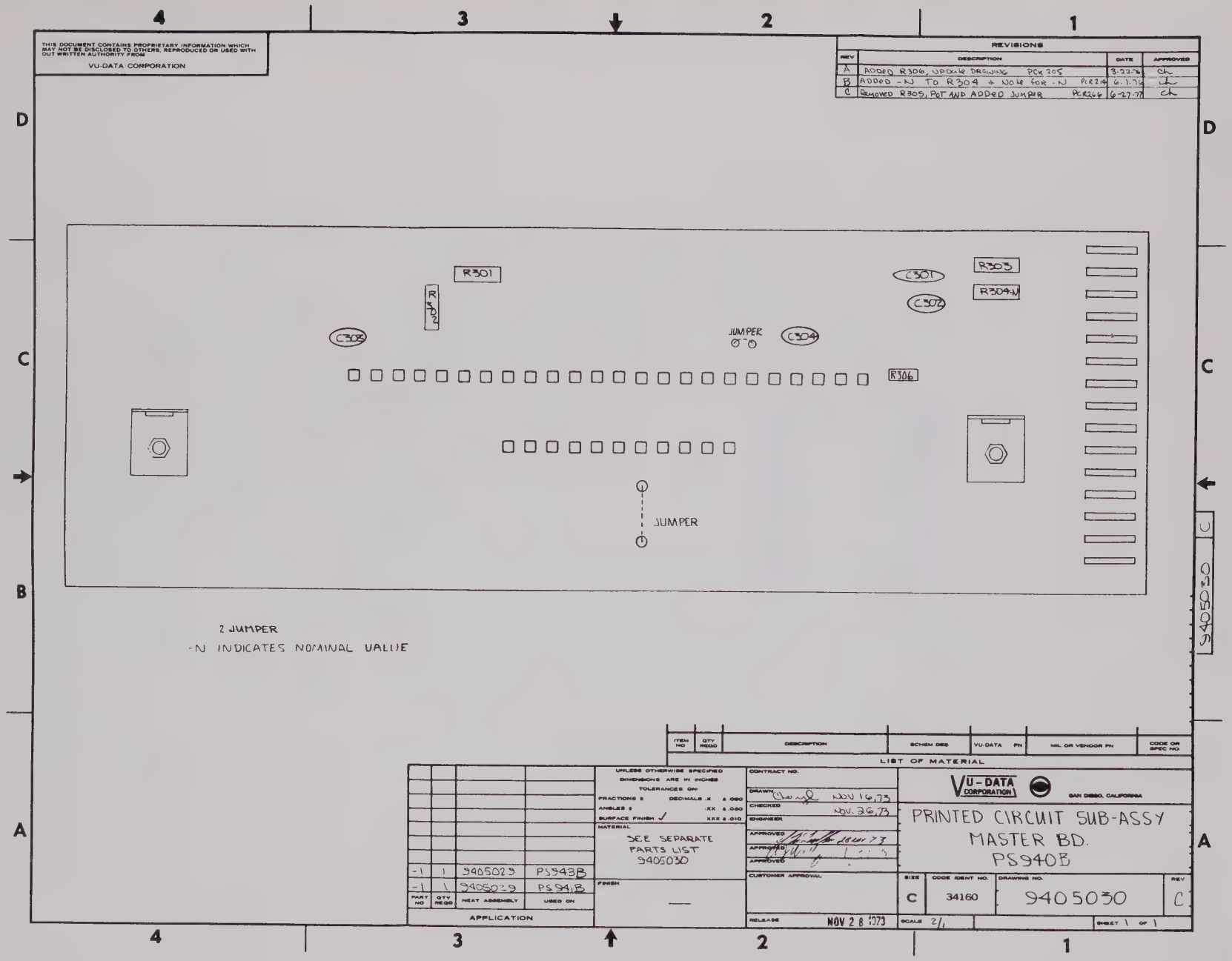

Figure 5-13. Parts Location for Master Board Sub-Assembly

SECTION VI

PARTS LIST

Mfg. Code Number	Manufacture	Location
00853	Sangamo	Marion, Illinois
01121	Allen Bradley	Milwaukee, Wisconsin
01295	Texas Instruments	Dallas, Texas
04062	Elmenco	New York, New York
04713	Motorola	Phoenix, Arizona
05397	Kemet	Cleveland, Ohio
06540	Amatom	New Rochelle, New York
07263	Fairchild	Mt. View, California
12406	Elpac	Fullerton, California
14099	Semtech Corp.	Newbury Park, California
14752	Electrocube	S. Pasadena, California
15818	Amelco	Mt. View, California
24913	Specialty Connector, Co.	Indianapolis, Indiana
26533	Zero	Burbank, California
27556	IMB	Santa Fe Springs, California
28520	Heyman Mfg., Co. (Heyco)	Kenilworth, New Jersey
34160	Vu-Data Corp.	San Diego, California
44655	Ohmite Mfg., Co.	Skokie, Illinois
46384	Penn Engineering	Doylestown, Pennsylvania
56289	Sprague	North Adams, Massachusetts
71450	CTS	Elkhart, Indiana
71590	Centralab	Milwaukee, Wisconsin
72619	Dialight Corp.	Brooklyn, New York
75915	Littlefuse	Des Plaines, Illinois
76055	Mallory	Frankfort, Indiana
78488	Stackpole	St. Mary's Pennsylvania
78553	Tinnerman Products	Cleveland, Ohio
80294	Bourns, Inc.	Riverside, California
80368	Sylvania	New York, New York
81073	Grayhill	La Grange, Illinois
82104	Standard Grigsby	Aurora, Illinois
83330	H.H. Smith	Brooklyn, New York
84171	Arco	Great Neck, New York
86684	RCA	Harrison, New Jersey
87034	Marco-Oak	Anaheim, California
88245	Useco	Van Nuys, California
90201	Mallory	Indianapolis, Indiana
91637	Dale	Columbus, Nebraska
91662	Elco	Willow Grove, Pennsylvania
92219	Waldom	Chicago, Illinois
94222	Southco	Chester, Pennsylvania
95566	Arnold Eng.	Orange, California
99800	Delevan Electric Corp.	Aurora, New York

Table 6-1. Series PS940 Assemblies

TABLE	ASSEMBLY DESCRIPTION	MODEL PS941	MODEL PS943
6-2	PS941 Final Assembly	9405058	
6-3	PS943 Final Assembly	–	9405068
6-4	Vertical Module Assembly	9405020-3	9405020-5
6-5	Vertical Switch Sub-Assy	9405021	9405021
6-6	Vertical Front Panel Sub-Assy	9405022-3	9405022-5
6-7	Vertical Input Board Sub-Assy	9405024-3	9405024-5
6-8	Horizontal Module Assembly	9405061-3	9405061-5
6-9	Horizontal Front Panel Sub-Assy	9405059-3	9405059-5
6-10	Horizontal Board Sub-Assy	9405062-3	9405062-5
6-11	Power Supply Assembly	9405027	9405027
6-12	Power Supply Board Sub-Assy	9405028	9405028
6-13	Display Assembly	9405029	9405029
6-14	Master Board Sub-Assy	9405030	9405030
6-15	Vertical Output Board Sub-Assy	9405031	9405031

Table 6-2. Parts List (PS941 Final Assembly 9405058)

REFERENCE DESIGNATOR	MANUFACTURER PART NUMBER	DESCRIPTION	MANU-FACTURER	VU-DATA PART NO.
1 Req.	9405061-3	Horiz. Module Assy	34160	-----
1 Req.	9405020-3	Vert. Module Assy	34160	-----
1 Req.	9405029	Display Assy	34160	-----
1 Req.	9405027	Power Supply Assy	34160	-----
1 Req.	9402009	Panel Spacer	34160	1-10602
1 Req.	9402014	Top Cover	34160	1-10611
1 Req.	9402090	Bottom Cover	34160	1-10757
1 Req.	9402019	Bezel	34160	1-10609
1 Req.	9402024	Protective Hood	34160	1-10616
1 Req.	9402061	Front Panel Trim	34160	1-10648
1 Req.	9402062	Decal, Bezel	34160	4-20165
1 Req.	9402048	Side Panel — Right	34160	1-10638
1 Req.	9402049	Side Panel — Left	34160	1-10639
1 Req.	9402060	M.F. Trim Bracket	34160	1-10642
4 Req.	DP-187	Hole Plug — Domed	Heyco	4-20298
2 Req.	9402067	Rear Trim	34160	1-10649
4 Req.	F6B	Cabinet Feet	Budwig	4-20177
1 Req.	17250	Power Cord	Belden	2-70005
2 Req.	9402094	Handle Support	34160	1-10694
2 Req.	9402095	Handle Arm	34160	1-10695
2 Req.	9402096	Handle Cover	34160	1-10696
1 Req.	9402100	Handle Grip	34160	1-10698
1 Req.	9402098	Handle Decal	34160	4-20236
		HARDWARE		
2 Req.	LC-032D-1	Compression Spring, .300od x 7/16"L	Lee Spring	4-20237
4 Req.	MS24693-43	Screw,Flathd,8-32x5/16	----	8-20042
2 Req.	22FT-632	6-32 Lock Nut	SPS	8-90003
2 Req.	Black Oxide	Screw, Flathd,6-32x11/16	----	8-90004
4 Req.	MS24693-272	Screw, Flathd,10-32x1/2	----	8-20063
1 Req.	MS24693-24	Screw, Flathd,6-32x1/4	----	8-20026
4 Req.	-----	Screw, Cross Recess, 6-32 x 3/8	----	8-90005
2 Req.	AN500D6-4	Screw, Binder Head, 6-32 x 1/4	----	8-90006
14 Req.	MS24693-2	Screw,Flathd, 4-40x1/4	----	8-20013
4 Req.	NAS671C4	Nut, 4-40 Plain Hex	----	8-30005
8 Req.	MS35333-70	Washer, #4 INT LK	----	8-40002
14 Req.	MS51957-13	Screw, Panhd, 4-40x1/4	----	8-10013

Table 6-3. Parts List (PS943 Final Assembly 9405068)

REFERENCE DESIGNATOR	MANUFACTURER PART NUMBER	DESCRIPTION	MANU-FACTURER	VU-DATA PART NO.
1 Req.	9405061-5	Horiz. Module Assy	34160	-----
1 Req.	9405020-5	Vert. Module Assy	34160	-----
1 Req.	9405029	Display Assy	34160	-----
1 Req.	9405027	Power Supply Assy	34160	-----
1 Req.	9402009	Panel Spacer	34160	1-10602
1 Req.	9402014	Top Cover	34160	1-10611
1 Req.	9402090	Bottom Cover	34160	1-10757
1 Req.	9402019	Bezel	34160	1-10609
1 Req.	9402024	Protective Hood	34160	1-10616
1 Req.	9402061	Front Panel Trim	34160	1-10648
1 Req.	9402062	Decal, Bezel	34160	4-20165
1 Req.	9402048	Side Panel – Right	34160	1-10638
1 Req.	9402049	Side Panel – Left	34160	1-10639
1 Req.	9402060	M.F. Trim Bracket	34160	1-10642
4 Req.	DP-187	Hole Plug – Domed	Heyco	4-20298
2 Req.	9402067	Rear Trim	34160	1-10649
4 Req.	F6B	Cabinet Feet	Budwig	4-20177
1 Req.	17250	Power Cord	Belden	2-70005
2 Req.	9402094	Handle Support	34160	1-10694
2 Req.	9402095	Handle Arm	34160	1-10695
2 Req.	9402096	Handle Cover	34160	1-10696
1 Req.	9402100	Handle Grip	34160	1-10698
1 Req.	9402098	Handle Decal	34160	4-20236
		HARDWARE		
2 Req.	22FT-632	6-32 Lock Nut	SPS	8-90003
2 Req.	-----	Screw,Flathd,6-32x11/16	----	8-90004
4 Req.	MS24693-272	Screw,Flathd,10-32x1/2	----	8-20063
4 Req.	MS24693-47	Screw,Flathd,8-32x5/16	----	8-20042
1 Req.	MS24693-24	Screw,Flathd,6-32x1/4	----	8-20026
4 Req.	-----	Screw,Cross Recess, 6-32 x 3/8	----	8-90005
2 Req.	AN500D6-4	Screw, Binder Head, 6-32 x 1/4	----	8-90006
14 Req.	MS24693-2	Screw,Flathd,4-40x1/4	----	8-20013
4 Req.	NAS671C4	Nut, 4-40 Plain Hex	----	8-30005
8 Req.	MS35333-70	Washer, #4 INT LK	----	8-40002
14 Req.	MS51957-13	Screw,Panhd,4-40x1/4	----	8-10013
2 Req.	LC-032D-1	Compression Spring, .300od x 7.16"L	Lee Spring	4-20237

Table 6-4. Parts List (Vertical Module Assembly 9405020)

REFERENCE DESIGNATOR	MANUFACTURER PART NUMBER	DESCRIPTION	MANU-FACTURER	VU-DATA PART NO.
1 Req. ▲	9405022-3	Vert. Frt Panel Sub-Assy	34160	-----
1 Req. ■	9405022-5	Vert. Frt Panel Sub-Assy	34160	-----
1 Req. ▲	9405024-3	Vert. Bd. Sub-Assy	34160	-----
1 Req. ■	9405024-5	Vert. Bd. Sub-Assy	34160	-----
2 Req.	9405021	Vert. Switch Sub-Assy	34160	-----
2 Req.	9402039	Bracket, Vert. Switch	34160	1-10629
1 Req.	9402053	Bracket, Vert. Pos Pot	34160	1-10636
1 Req.	9402055	Shaft, Vert. Pos Pot	34160	1-10807
C301, 305	BA2E104K	Cap,Mylar,.1μf±10%,400V	27556	6-59104
CR301,302	IN914	Diode, GP, Signal	07263	3-10914
R330,331	RCR07G510JR	Res, CC, 51Ω,1/4W,5%	01121	5-10510
R332	RCR07G101JR	Res, CC, 100Ω,1/4W,5%	01121	5-10101
R310,323	RCR07G100JR	Rec, CC, 10Ω,1/4W,5%	01121	5-10100
R326	RV6NAYSD101B	Res, Var, Car, 100Ω	01121	5-76101
		HARDWARE		
1 Req.	MS51957-15	Screw,Panhd,4-40 x 3/8	----	8-10015
2 Req.	MS24693-2	Screw,Flathd,4-40 x 1/4	----	8-20013
2 Req.	023-352	Knob, Blk, 1/4" Shaft	Elma	4-10013
2 Req.	021-123	Knob, Red, 1/8" Shaft	Elma	4-10009
2 Req.	040-103	Knob, Cap, Red	Elma	4-10010
2 Req.	044-202	Nut Cover, Decorative	Elma	4-10019
1 Req.	021-222	Knob, Blk, 1/8" Shaft	Elma	4-10011
1 Req.	040-102	Knob, Cap, Blk	Elma	4-10012
1 Req.	180	1/8" Shaft Coupler	83330	1-10699
▲	–3 Assy	PS941 ONLY		
■	–5 Assy	PS943 ONLY		

Table 6-5. Parts List (Vertical Switch Sub-Assy 9405021)

REFERENCE DESIGNATOR		MANUFACTURER PART NUMBER	DESCRIPTION	MANU-FACTURER	VU-DATA PART NO.
CH1	CH2				
S101	S201	9402029	Switch, Vertical	34160	2-10036
			CAPACITORS		
C111	C211	DM15-050D	DM, 5Pf±.5Pf, 500V	04062	6-19050
C102	C202	PC400	Var, Mica, 2-8Pf	04062	6-96000
C103	C203	C4002/1B	Var, Mica, 1.5-20Pf	84171	6-96005
C104	C204	DM15-331J	DM, 330Pf±5%, 500V	04062	6-19331
C109	C209	5HK-D50	CD, .005μfGMV, 1KV	56289	6-29502
C101	C201	DM15-150J	DM, 15Pf±5%, 500V	04062	6-19150
			RESISTORS		
R108	R208	RCR07G101JR	CC, 100Ω, 1/4W, 5%	01121	5-10101
R107	R207	RN55D13R3F	MF, 13.3Ω, 1/8W, 1%	91637	5-51012
R106	R206	RN55D20R0F	MF, 20.0Ω, 1/8W, 1%	91637	5-51029
R105	R205	RN55D33R2F	MF, 33.2Ω, 1/8W, 1%	91637	5-51050
R104	R204	RN55D64R9F	MF, 64.9Ω, 1/8W, 1%	91637	5-51078
R103	R203	RN55D2000F	MF, 200Ω, 1/8W, 1%	91637	5-51125
R102	R202	RN55D3320F	MF, 332Ω, 1/8W, 1%	91637	5-51146
R122	R222	RN55D1022F	MF, 10.2Ω, 1/8W, 1%	91637	5-51300
R109	R209	RN60D1004F	MF, 1MΩ, 1/8W, 1%	91637	5-50490
R123	R223	RN60D1004F	MF, 1MΩ, 1/8W, 1%	91637	5-50490
R125	R225	RCR07G100JR	CC, 10Ω, 1/4W, 5%	01121	5-10100
R127	R227	RCR20G104J	CC, 100KΩ, 1/2W, 5%	01121	5-20104
R128	R228	RN55D1502F	MF, 1.50KΩ, 1/8W,1%	91637	5-51210
L101	L201	.115 x .125	Ferrite Bead	Amidon	5-90001

Table 6-6. Parts List (Vertical Front Panel Sub-Assy 9405022)

REFERENCE DESIGNATOR	MANUFACTURER PART NUMBER	DESCRIPTION	MANU-FACTURER	VU-DATA PART NO.
1 Req. ▲	9402032-3	Front Panel, Vert.	34160	1-10762
1 Req. ■	9402032-5	Front Panel, Vert.	34160	1-10763
1 Req.	9402038	Bracket, Front Panel	34160	1-10628
S308 ▲	7101	Switch, Toggle	C&K	2-10003
S308 ■	7211	Switch, Toggle	C&K	2-10002
S305, 306	7211	Switch, Toggle	C&K	2-10002
S307	7201	Switch, Toggle	C&K	2-10015
R327	RV6NAYSD252B	Res, Var, Car, 2.5KΩ	01121	5-76252
1 Req.	184	Panel Bearing, 1/8" Shaft	83330	4-20120
1 Req.	021-222	Knob, Blk, 1/8" Shaft	Elma	4-10011
1 Req.	040-102	Cap, Blk	Elma	4-10012
J301, 302	31-221-1015	BNC Conn., UG1094/U	Amphenol	2-28998
▲	–3 SUB-ASSY	PS941 ONLY		
■	–5 SUB-ASSY	PS943 ONLY		

Table 6-7. Parts List (Vertical Input Sub-Assy 9405024)

REFERENCE DESIGNATOR	MANUFACTURER PART NUMBER	DESCRIPTION	MANU-FACTURER	VU-DATA PART NO.
▲	–3 Sub-Assy	PS941 Only		
■	–5 Sub-Assy	PS943 Only		
1 Req.	9403024	Etched Circuit Board	34160	1-20068
		CAPACITORS		
C1	-----	-----	----	-----
C2	1802Z5U050A104Z	MonoCer,.1μf+80-20%,50V	Varadyne	6-36104
C3	1802Z5U050A104Z	MonoCer,.1μf+80-20%,50V	Varadyne	6-36104
C4	1802Z5U050A104Z	MonoCer,.1μf+80-20%,50V	Varadyne	6-36104
C5	1802Z5U050A104Z	MonoCer,.1μf+80-20%,50V	Varadyne	6-36104
C6	1802Z5U050A104Z	MonoCer,.1μf+80-20%,50V	Varadyne	6-36104
C7	T362D107M020AS	Tant, 100μf,±20%, 20V	05397	6-74107
C8	T362D107M020AS	Tant, 100μf,±20%, 20V	05397	6-74107
C9-11	-----	-----	----	-----
C12	1802Z5U050A104Z	MonoCer,.1μf+80-20%,50V	Varadyne	6-36104
C13	1802Z5U050A104Z	MonoCer,.1μf+80-20%,50V	Varadyne	6-36104
C14	T362D227M010AS	Tant, 220μf,+20%, 10V	05397	6-76227
C15	-----	-----	----	-----
C16	1802Z5U050A104Z	MonoCer,.1μf+80-20%,50V	Varadyne	6-36104
C17	1802Z5U050A104Z	MonoCer,.1μf+80-20%,50V	Varadyne	6-36104
C18	1802Z5U050A104Z	MonoCer,.1μf+80-20%,50V	Varadyne	6-36104
C19	1802Z5U050A104Z	MonoCer,.1μf+80-20%,50V	Varadyne	6-36104
C20	T362D107M020AS	Tant, 100μf,±20%, 20V	05397	6-74107
C21	T362D107M020AS	Tant, 100μf,±20%, 20V	05937	6-74107
C22	-----	-----	----	-----
C23	T362D227M010AS	Tant, 220μf,±20%, 10V	05397	6-76227
C24	T362D227M010AS	Tant, 220μf,±20%, 10V	05937	6-76227
C25	T362D227M010As	Tant, 220μf,±20%, 10V	05937	6-76227
C26	-----	-----	----	-----
C27	T362D227M010AS	Tant, 220μf,±20%, 10V	05937	6-76227
C28	1802Z5U050A104Z	MonoCer,.1μf+80-20%,50V	Varadyne	6-36104
C29	1802Z5U050A104Z	MonoCer,.1μf+80-20%,50V	Varadyne	6-36104
C30	1802Z5U050A104Z	MonoCer,.1μf+80-20%,50V	Varadyne	6-36104
C31	1802Z5U050A104Z	MonoCer,.1μf+80-20%,50V	Varadyne	6-36104
C32	1802Z5U050A104Z	MonoCer,.1μf+80-20%,50V	Varadyne	6-36104
C33	1802Z5U050A104Z	MonoCer,.1μf+80-20%,50V	Varadyne	6-36104
C34	DM15-121J	DM, 120Pf, ±5%, 500V	04062	6-19121
C35	DM15-121J	DM, 120Pf, ±5%, 500V	04062	5-19121
C36 ■	1802Z5U050A104Z	MonoCer,.1μf+80-20%,50V	Varadyne	6-36104
C37	DM15-471J	DM, 470Pf, ±5%, 500V	04062	6-19471
C38	DDM-103	CD,.01μf+60-40%,150V	71590	6-27103

Table 6-7. Parts List (Vertical Input Sub-Assy 9405024) Con't

REFERENCE DESIGNATOR	MANUFACTURER PART NUMBER	DESCRIPTION	MANU-FACTURER	VU-DATA PART NO.
C39	DDM-103	CD,.01μf+60-40%,150V	71590	6-27103
C40	DDM-103	CD,.01μf+60-40%,150V	71590	6-27103
C41	DM15-471J	DM, 470Pf, ±5%, 500V	04062	6-19471
C42	DDM-103	CD,.01μf+60-40%,150V	71590	6-27103
C43	DDM-103	CD,.01μf+60-40%,150V	71590	6-27103
C44	DDM-103	CD,.01μf+60-40%,150V	71590	6-27103
		CHOKES		
L1	1537-76	100μHy	99800	5-90007
L2	1537-76	100μHy	99800	5-90007
L3	1537-76	100μHy	99800	5-90007
L4	1537-76	100μHy	99800	5-90007
		DIODES		
CR1	1N914	GP, Signal	07263	3-10914
CR2	1N914	GP, Signal	07263	3-10914
CR3	FD300	Low Leakage	07263	3-10300
CR4	FD300	Low Leakage	07263	3-10300
CR5	5082-2811	Schottky	H.P.	3-12811
CR6	5082-2811	Schottky	H.P.	3-12811
CR7	1N914	GP, Signal	07263	3-10914
CR8	1N914	GP, Signal	07263	3-10914
CR9	1N914	GP, Signal	07263	3-10914
CR10	1N914	GP, Signal	07263	3-10914
CR11	1N914	GP, Signal	07263	3-10914
CR12	1N914	GP, Signal	07263	3-10914
CR13	FD300	Low Leakage	07263	3-10300
CR14	FD300	Low Leakage	07263	3-10300
CR15	5082-2811	Schottky	H.P.	3-12811
CR16	5082-2811	Schottky	H.P.	3-12811
CR17	1N914	GP, Signal	07263	3-10914
CR18	1N914	GP, Signal	07263	3-10914
CR19	1N914	GP, Signal	07263	3-10914
CR20	1N914	GP, Signal	07263	3-10914
CR21	1N914	GP, Signal	07263	3-10914
CR22	1N914	GP, Signal	07263	3-10914
CR23	1N914	GP, Signal	07263	3-10914
CR24	1N914	GP, Signal	07263	3-10914
CR25	1N751	Zener	07263	3-10751
CR26	1N751	Zener	07263	3-10751
11 Req.	02-011-013-5-200	Elco Pin, 1/16" Card	Elco	2-29994

Table 6-7. Parts List (Vertical Input Sub-Assy 9405024) Con't

REFERENCE DESIGNATOR	MANUFACTURER PART NUMBER	DESCRIPTION	MANU-FACTURER	VU-DATA PART NO.
		INTEGRATED CIRCUITS		
U1	-----	-----	----	-----
U2	CA3018	AMP, Array	86684	3-33018
U3	733HC	AMP, 733	07263	3-30733
U4	CA3018	AMP, Array	86684	3-33018
U5	733HC	AMP, 733	07263	3-30733
U6	-----	-----	----	-----
U7	CA3018	AMP, Array	86684	3-33018
U8	733HC	AMP, 733	07263	3-30733
U9	FD1673	Fet, Dual, NCH	Solitron	3-21673
U10	FD1673	Fet, Dual, NCH	Solitron	3-21673
		RESISTORS		
R1, R2	-----	-----	----	-----
R3	RCR07G100JR	CC, 10Ω, 1/4W, 5%	01121	5-10100
R4	360T500B	Var, Cer, 50Ω	71450	5-73500
R5	----	-----	----	-----
R6	RCR07G104JR	CC, 100KΩ, 1/4W, 5%	01121	5-10104
R7	RCR07G104JR	CC, 100KΩ, 1/4W, 5%	01121	5-10104
R8	RCR07G101JR	CC, 100Ω, 1/4W, 5%	01121	5-10101
R9	RCR07G682JR	CC, 6.8KΩ, 1/4W, 5%	01121	5-10682
R10	RCR07G682JR	CC, 6.8KΩ, 1/4W, 5%	01121	5-10682
R11	RN55D3321F	MF, 3.32KΩ, 1/8W, 1%	91637	5-51243
R12	RN55D3321F	MF, 3.32KΩ, 1/8W, 1%	91637	5-51243
R13	360T502B	Var, Cer, 5KΩ	71450	5-73502
R14	RCR07G681JR	CC, 680Ω, 1/4W, 5%	01121	5-10681
R15	RCR07G100JR	CC, 10Ω, 1/4W, 5%	01121	5-10100
R16-N	RN55D3740F	MF, 374Ω,1/8W, 1%	91637	5-51151
R17	360T501B	Var, Cer, 500Ω	71450	5-73501
R18	RCR07G101JR	CC, 100Ω, 1/4W, 5%	01121	5-10101
R19	RCR07G100JR	CC, 10Ω, 1/4W, 5%	01121	5-10100
R20	RCR07G331JR	CC, 300Ω, 1/4W, 5%	01121	5-10331
R21, R22	-----	-----	----	-----
R23	RCR07G105JR	CC, 1MΩ, 1/4W, 5%	01121	5-10105
R24, R25	-----	-----	----	-----
R26	RCR07G102JR	CC, 1KΩ, 1/4W, 5%	01121	5-10102
R27	RCR07G682JR	CC, 6.8KΩ, 1/4W, 5%	01121	5-10682
R28	RCR07G392JR	CC, 3.9KΩ, 1/4W, 5%	01121	5-10392
R29	RCR07G682JR	CC, 6.8KΩ, 1/4W, 5%	01121	5-10682
R30	RCR07G101JR	CC, 100Ω, 1/4W, 5%	01121	5-10101
R31	RCR07G101JR	CC, 100Ω, 1/4W, 5%	01121	5-10101
R32	RCR07G682JR	CC, 6.8KΩ, 1/4W, 5%	01121	5-10682

—N Indicates Nominal Value
H.P. — Hewlett Packard

Table 6-7. Parts List (Vertical Input Sub-Assy 9405024) Con't

REFERENCE DESIGNATOR	MANUFACTURER PART NUMBER	DESCRIPTION	MANU-FACTURER	VU-DATA PART NO.
R33	RCR07G682JR	CC, 6.8KΩ, 1/4W, 5%	01121	5-10682
R34	RCR07G101JR	CC, 100Ω, 1/4W, 5%	01121	5-10101
R35	RCR07G271JR	CC, 270Ω, 1/4W, 5%	01121	5-10271
R36	RCR07G100JR	CC, 10Ω, 1/4W, 5%	01121	5-10100
R37	RN55D1001F	MF, 1.00KΩ, 1/8W, 1%	91637	5-51193
R38	RCR07G510JR	CC, 51Ω, 1/4W, 5%	01121	5-10510
R39	RCR07G301JR	CC, 300Ω, 1/4W, 5%	01121	5-10301
R40	360T202B	Var, Cer, 2KΩ	71450	5-73202
R41	RCR07G202JR	CC, 2KΩ, 1/4W, 5%	01121	5-10202
R42	RCR07G390JR	CC, 39Ω, 1/4W, 5%	01121	5-10390
R43	-----	-----	----	-----
R44	RCR07G100JR	CC, 10Ω, 1/4W, 5%	01121	5-10100
R45	360T500B	Var, Cer, 50Ω	71450	5-73500
R46	RCR07G390JR	CC, 39Ω, 1/4W, 5%	01121	5-10390
R47	RCR07G104JR	CC, 100KΩ, 1/4W, 5%	01121	5-10104
R48	RCR07G104JR	CC, 100KΩ, 1/4W, 5%	01121	5-10104
R49	RCR07G101JR	CC, 100Ω, 1/4W, 5%	01121	5-10101
R50	RCR07G682JR	CC, 6.8KΩ, 1/4W, 5%	01121	5-10682
R51	RCR07G682JR	CC, 6.8KΩ, 1/4W, 5%	01121	5-10682
R52	RN55D3321F	MF, 3.32KΩ, 1/8W, 1%	91637	5-51243
R53	360T500B	Var, Cer, 50Ω	71450	5-73500
R54	RN55D3321F	MF, 3.32KΩ, 1/8W, 1%	01121	5-51243
R55	360T502B	Var, Cer, 5KΩ	71450	5-73502
R56	RCR07G681JR	CC, 680Ω, 1/4W, 5%	01121	5-10681
R57	RCR07G100JR	CC, 10Ω, 1/4W, 5%	01121	5-10100
R58	RN55D2210F	MF, 221Ω, 1/8W, 1%	91637	5-51129
R59	360T501B	Var, Cer, 500Ω	71450	5-73501
R60	RCR07G101JR	CC, 100Ω, 1/4W, 5%	01121	5-10101
R61	RCR07G100JR	CC, 10Ω, 1/4W, 5%	01121	5-10100
R62	RCR07G331JR	CC, 330Ω, 1/4W, 5%	01121	5-10331
R63	RCR07G105JR	CC, 1MΩ, 1/4W, 5%	01121	5-10105
R64	RCR07G102JR	CC, 1KΩ, 1/4W, 5%	01121	5-10102
R65	RCR07G392JR	CC, 3.9KΩ, 1/4W, 5%	01121	5-10392
R66-N	RCR07G392JR	CC, 3.9KΩ, 1/4W, 5%	01121	5-10392
R67	RCR07G272JR	CC, 2.7KΩ, 1/4W, 5%	01121	5-10272
R68	RCR07G682JR	CC, 6.8KΩ, 1/4W, 5%	01121	5-10682
R69	RCR07G682JR	CC, 6.8KΩ, 1/4W, 5%	01121	5-10682
R70 ■	RCR07G103JR	CC, 10KΩ, 1/4W, 5%	01121	5-10103
R71 ■	RCR07G103JR	CC, 10KΩ, 1/4W, 5%	01121	5-10103
R72 ■	RCR07G563JR	CC, 56KΩ, 1/4W, 5%	01121	5-10563
R73	RN55D49R2F	MF, 49.9Ω, 1/8W, 1%	91637	5-51067
R74	RN55D40R2F	MF, 40.2Ω, 1/8W, 1%	91637	5-51058

—N Indicates Nominal Value

■ PS943 Only

Table 6-7. Parts List (Vertical Input Sub-Assy 9405024) Con't

REFERENCE DESIGNATOR	MANUFACTURER PART NUMBER	DESCRIPTION	MANU-FACTURER	VU-DATA PART NO.
R75	RCR07G105JR	CC, 1MΩ, 1/4W, 5%	01121	5-10105
R76	RN55D49R2F	MF, 49.9Ω, 1/8W, 1%	91637	5-51067
R77	RN55D40R2F	MF, 40.2Ω, 1/8W, 1%	91637	5-51058
R78	RCR07G105JR	CC, 1MΩ, 1/4 W,5%	01121	5-10105
R79	RN55D33R2F	MF, 33.2Ω, 1/8W, 1%	91637	5-51050
R80	RN55D33R2F	MF, 33.2Ω, 1/8W, 1%	91637	5-51050
R81	RCR07G151JR	CC, 150Ω, 1/4W, 5%	01121	5-10151
R82	RCR07G101JR	CC, 100Ω, 1/4W, 5%	01121	5-10101
		TERMINALS		
TP1	2970-01-03	Terminal	Cambion	2-23998
TP2	2970-01-03	Terminal	Cambion	2-23998
TP3	2970-01-03	Terminal	Cambion	2-23998
TP4	2970-01-03	Terminal	Cambion	2-23998
TP5	2970-01-03	Terminal	Cambion	2-23998
		TRANSISTORS		
Q1	2N3694	NPN, Signal	07263	3-23694
Q2	2N4275	NPN, Signal	07263	3-24275
Q3	2N3694	NPN, Signal	07263	3-23694
Q4	2N4275	NPN, Signal	07263	3-24275
Q5 ▪	2N4275	NPN, Signal	07263	3-24275
Q6 ▪	2N4275	NPN, Signal	07263	3-24275
Q7	2N3904	NPN, Signal	07263	3-23904
Q8	2N3904	NPN, Signal	07263	3-23904
Q9	2N3906	PNP, Signal	07263	3-23906
		HARDWARE		
1 Req.	2373	Spacer, 4-40 x 3/4"	83330	4-20166
2 Req.	KF2-440	Captive Fastener	46384	4-20295
1 Req.	MS51957-15	Screw, Panhd, 4-40 x 3/8"	----	8-10015
1 Req.	MS35333-70	Washer, #4 INT LK	----	8-40002

▪ PS943 Only

Table 6-8. Parts List (Horizontal Module Assy 9405061)

REFERENCE DESIGNATOR	MANUFACTURER PART NUMBER	DESCRIPTION	MANU-FACTURER	VU-DATA PART NO.
1 Req. ▲	9405069-3	Horizontal Front Panel Sub-Assy	34160	-----
1 Req. ■	9405059-5	Horizontal Front Panel Sub-Assy	34160	-----
1 Req. ▲	9405062-3	Horiz. Bd. Sub-Assy	34160	-----
1 Req. ■	9405062-5	Horiz. Bd. Sub-Assy	34160	-----
1 Req.	9402046	Shaft, Mode Switch	34160	1-10809
1 Req.	9402108	Shaft, Sweep Mag.	34160	1-10810
C201	DM15-050D	DM, 5Pf±.5Pf, 500V	04062	6-19050
DS201	XC209G	Indicator Light, Green	XCITON	3-10210
R201	RCR07G684JR	Res, CC, 680KΩ,1/4W, 5%	01121	5-10684
R202	RCR07G334JR	Res, CC, 330KΩ, 1/4W, 5%	01121	5-10334
		HARDWARE		
2 Req.	180	Shaft Coupler	83330	1-10699
1 Req.	023-352	Knob, Blk, 1/4" Shaft	Elma	4-10013
1 Req.	021-123	Knob, Red, 1/8" Shaft	Elma	4-10009
1 Req.	040-103	Knob, Cap, Red	Elma	4-10010
2 Req.	023-2220	Knob, Blk, 1/8" Shaft	Interlok	4-10022
2 Req.	040-102	Knob, Cap, Blk	Elma	4-10012
1 Req.	021-222	Knob, Blk, 1/8" Shaft	Elma	4-10011
1 Req.	9152022	Knob, Cap, X5 Mag	34160	4-10025
L201	.115 x .125	Ferrite Bead	Amidon	5-90001
▲	–3 ASSY	PS941 ONLY		
■	–5 ASSY	PS943 ONLY		

Table 6-9. Parts List (Horizontal Front Panel Sub-Assy 9405059)

REFERENCE DESIGNATOR	MANUFACTURER PART NUMBER	DESCRIPTION	MANU-FACTURER	VU-DATA PART NO.
1 Req. ▲	9402031-3	Front Panel, Horiz.	34160	1-10760
1 Req. ■	9402031-5	Front Panel, Horiz.	34160	1-10761
1 Req.	9402050	Module Bracket, Horiz.	34160	1-10634
S201, 202	7101	Switch, Toggle	C&K	2-10003
R204, 205	MLC-505	Res, Var, Car, 5MΩ	Mallory	5-78505
R203	MLC-54L	Res, Var, Car, 50KΩ	Mallory	5-77513
J201	31-221-1015	BNC Conn., UG1094/U	Amphenol	2-28998
3 Req.	021-222	Knob, Blk, 1/8" Shaft	Elma	4-10011
3 Req.	040-102	Knob, Cap, Blk	Elma	4-10012
▲	–3 SUB-ASSY	PS941 ONLY		
■	–5 SUB-ASSY	PS943 ONLY		

Table 6-10. Parts List (Horizontal Board Sub-Assy 9405062)

REFERENCE DESIGNATOR	MANUFACTURER PART NUMBER	DESCRIPTION	MANU-FACTURER	VU-DATA PART NO.
▲	–3 ASSY	PS941 ONLY		
■	–5 ASSY	PS943 ONLY		
1 Req.	9403063	Etched Circuit Board	34160	1-20090
		CAPACITORS		
C1	T362C106M035AS	Tant, 10μf±20%,35V	05397	6-75106
C2	T362D227M010AS	Tant, 220μf±20%, 10V	05397	6-76227
C3	T362B225M035AS	Tant, 2.2μf±20%,35V	05397	6-75225
C4	UK25-223	CD,.022μf±20%,25V	71590	6-24203
C5	DM15-471J	DM,470Pf±5%,500V	04062	6-10471
C6 ▲	RA2A205J	MM,2μf±5%,50V	27556	6-46205
C7	9002070	MM,1μf,50V } Matched	34160	6-56003
C8	–––––	MM,.01μf,50V } Set	––––	–––––
C9	DM15-820J	DM,82Pf±5%,500V	04062	6-19820
C10	PC402	Var,Mica,1.5-20Pf	04062	6-96001
C11	T362A474M035AS	Tant,.47μf±20%,35V	05397	6-75474
C12	1802Z5U050A104Z	MonoCer,.1μf+80-20%,50V	Varadyne	6-36104
C13	DM15-331J	DM,330Pf±5%,500V	04062	6-19331
C14	DD272	CD,.0027μf±20%,1KV	71590	6-20272
C15	DM15-101J	DM,100Pf±5%,500V	04062	6-19101
C16	DM15-221J	DM,220Pf±5%,500V	04062	6-19221
C17	1802Z5U050A104Z	MonoCer,.1μf+80-20%,50V	Varadyne	6-36104
C18	538-001,A,2-8Pf	Var, Cer, 2-8Pf	Erie	6-96002
C19	DM15-100J	DM,10Pf±5%,500V	04062	6-19100
C20	DM15-101J	DM,100Pf±5%,500V	04062	6-19101
C21	–––––	–––––	––––	–––––
C22	DC-503	CD,.05μf±5%,100V	71590	6-29050
C23	DM15-330J	DM,33Pf±5%,500V	04062	6-19330
C24	1802Z5U050A104Z	MonoCer,.1μf+80-20%,50V	Varadyne	6-36104
C25	DM15-330J	DM,33Pf±5%,500V	04062	6-19330
C26	DDM-103	CD,.01μf+60-40%,150V	71590	6-27103
C27	1802Z5U050A104Z	MonoCer,.1μf+80-20%,50V	Varadyne	6-36104
C28	–––––	–––––	––––	–––––
C29	–––––	–––––	––––	–––––
C30	1802Z5U050A104Z	MonoCer,.1μf+80-20%,50V	Varadyne	6-36104
C31	1802Z5U050A104Z	MonoCer,.1μf+80-20%,50V	Varadyne	6-36104
C32	1802Z5U050A104Z	MonoCer,.1μf+80-20%,50V	Varadyne	6-36104
C33	1802Z5U050A104Z	MonoCer,.1μf+80-20%,50V	Varadyne	6-36104
C34	DM15-470J	DM,47Pf±5%,500V	04062	6-19470
C35	DM15-330J	DM,33Pf±5%,500V	04062	6-19330
C36	DM15-331J	DM,330Pf±5%,500V	04062	6-19331

Table 6-10. Parts List (Horizontal Board Sub-Assy 9405062) Con't

REFERENCE DESIGNATOR	MANUFACTURER PART NUMBER	DESCRIPTION	MANU-FACTURER	VU-DATA PART NO.
C37	DM15-330J	DM,33Pf±5%,500V	04062	6-19330
C38	DM15-331J	DM,330Pf±5%,500V	04062	6-19331
C39	1802Z5U050A104Z	MonoCer,.1μf+80-20%,50V	Varadyne	6-36104
C40-N	DM15-330J	DM,33Pf±5%,500V	04062	6-19330
C41	T362D337M006AS	Tant,330μf±20%,6V	05397	6-71337
C42	DM15-820J	DM,82Pf±5%,500V	04062	6-19820
C43	1802Z5U050A104Z	MonoCer,.1μf+80-20%,50V	Varadyne	6-36104
C44	-----	DM, TBD	04062	-----
C45	DDM-103	CD,.01μf+60-40%,150V	71590	6-27103
C46	2130Z5U100R104ZC	MonoCer,.1μf+80-20%,100V	Varadyne	6-37104
C47	DDM-103	CD,.01μf+60-40%,150V	71590	6-27103
C48	1802Z5U050A104Z	MonoCer,.1μf+80-20%,50V	Varadyne	6-36104
C49	DDM-103	CD,.01μf+60-40%,150V	71590	6-27103
C50	1802Z5U050A104Z	MonoCer,.1μf+80-20%,50V	Varadyne	6-36104
C51	DDM-103	CD,.01μf+60-40%,150V	71590	6-27103
C52	2130Z5U100R104ZC	MonoCer,.1μf+80-20%,100V	Varadyne	6-37104
C53	1802Z5U050A104Z	MonoCer,.1μf+80-20%,50V	Varadyne	6-36104
C54	DM15-151J	DM,150Pf±5%,500V	04062	6-19151
C55	1802Z5U050A104Z	MonoCer,.1μf+80-20%,50V	Varadyne	6-36104
C56	-----	DM, TBD	04062	-----
C57	-----	DM, TBD	04062	-----
C58	1802Z5U050A104Z	MonoCer,.1μf+80-20%,50V	Varadyne	6-36104
C59	1802Z5U050A104Z	MonoCer,.1μf+80-20%,50V	Varadyne	6-36104
C60	DDM-103	CD,.01μf+60-40%,150V	71590	6-27103
C61	DDM-103	CD,.01μf+60-40%,150V	71590	6-27103
C62-N	DM15-101J	DM,100Pf±5%,500V	04062	6-19101
C63	DM15	DM, TBD	04062	6-19
C64	538-011,A,2-8Pf	Var, Cer, 2-8Pf	Erie	6-96002
C65	DDM-103	CD,.01μf+60-40%,150V	71590	6-27103
C66	DDM-103	CD,.01μf+60-40%,150V	71590	6-27103
C67	2130Z5U100R104ZC	MonoCer,.1μf+80-40%,100V	Varadyne	6-37104
C68	-----	-----	----	-----
C69	-----	-----	----	-----
C70	DM15	DM, TBD	04062	6-19
C71	DM15-100J	DM,10Pf±5%,500V	04062	6-19100
C72-C79	-----	Not Used	----	-----
C80 ■	2130Z5U100R104Z	MonoCer,.1μf+80-20%,100V	Varadyne	6-37104
C81	500D605F100CC7	Elect, 6μf, 100V	56289	6-87605
C82	500D605F100CC7	Elect, 6μf, 100V	56289	6-87605
C83-N	DM15-680J	DM,68pf ±5%,500V	04062	6-19050
		DIODES		
CR1	IN914	GP, Signal	07263	3-10914

—N Indicates Nominal Value
■ PS943 ONLY

Table 6-10. Parts List (Horizontal Board Sub-Assy 9405062) Con't

REFERENCE DESIGNATOR	MANUFACTURER PART NUMBER	DESCRIPTION	MANU-FACTURER	VU-DATA PART NO.
CR2	1N914	GP, Signal	07263	3-10914
CR3	1N960B	Zener, 9.1V	07263	3-10960
CR4	1N914	GP, Signal	07263	3-10914
CR5	1N270	GP, Signal	07263	3-10270
CR6	-----	-----	----	-----
CR7	1N914	GP, Signal	07263	3-10914
CR8	1N914	GP, Signal	07263	3-10914
CR9	1N914	GP, Signal	07263	3-10914
CR10	1N914	GP, Signal	07263	3-10914
CR11	1N914	GP, Signal	07263	3-10914
CR12	1N914	GP, Signal	07263	3-10914
CR13	1N914	GP, Signal	07263	3-10914
CR14	MBD701	Schottky	04713	3-10701
CR15	MBD701	Schottky	04713	3-10701
CR16	1N914	GP, Signal	07263	3-10914
CR17	9152052	GP, Silicon	34160	3-10001
CR18	1N914	GP, Signal	07263	3-10914
CR19	9152052	GP, Silicon	34160	3-10001
CR20	9152052	GP, Silicon	34160	3-10001
CR21	9152052	GP, Silicon	34160	3-10001
CR22	9152052	GP, Silicon	34160	3-10001
CR23	9152052	GP, Silicon	34160	3-10001
CR24	1N914	GP, Signal	07263	3-10914
CR25	1N914	GP, Signal	07263	3-10914
CR26	9152052	GP, Silicon	34160	3-10001
CR27	9152052	GP, Silicon	34160	3-10001
CR28	9152052	GP, Silicon	34160	3-10001
CR29	9152052	GP, Silicon	34160	3-10001
CR30	9152052	GP, Silicon	34160	3-10001
24 Req.	02-024-013-5-200	Elco Pin, 1/16" Card	Elco	2-29994
		INTEGRATED CIRCUITS		
U1	SN74L122N	One-Shot, SN74L122N	01294	3-3122N
U2	LM318	OP AMP, LM318	Nat'l *	3-30318
U3	FD1673	Dual Fet, FD1673	Solitron	3-21673
U4	760DC	Comp, 760	07263	3-30760
U5	SN7451N	Gate, SN7451N	01294	3-37451
U6	SN7476N	Flip-Flop, SN7476N	01294	3-37476
U7	SN7451N	Gate, SN7451N	01294	3-37451

*To Be National ONLY

Table 6-10. Parts List (Horizontal Board Sub-Assy 9405062) Con't

REFERENCE DESIGNATOR	MANUFACTURER PART NUMBER	DESCRIPTION	MANU-FACTURER	VU-DATA PART NO.
		RESISTORS		
R1	RCR07G272JR	CC,2.7KΩ,1/4W,5%	01121	5-10272
R2	-----	Reference S1	----	-----
R3	RN55D9761F	MF,9.76KΩ,1/8W,1%	91637	5-51298
R4	RN55D4872F	MF,48.7KΩ,1/8W,1%	91637	5-51365
R5	RN55D1623F	MF,162KΩ,1/8W,1%	91637	5-51414
R6	RN60D4873F	MF,487KΩ,1/8W,1%	91637	5-50460
R7 ▲	RN60D4323F	MF,432KΩ,1/8W,1%	91637	5-50455
R8 ▲	RN60D1004F	MF,1MΩ,1/8W,1%	91637	5-50490
R8 ■	RN55D3571F	MF,3.57KΩ,1/8W,1%	91637	5-51246
R9 ▲	360T254B	Var, Cer, 250KΩ	71450	5-73254
R9 ■	360T502B	Var, Cer, 5KΩ	71450	5-73502
R10	RN55D2433F	MF,243KΩ,1/8W,1%	91637	5-51431
R11	RN55D4872F	MF,48.7KΩ,1/8W,1%	91637	5-51365
R12	RN55D9761F	MF,9.76KΩ,1/8W,1%	91637	5-51298
R13	RCR07G101JR	CC,100Ω,1/4W,5%	01121	5-10101
R14	RCR07G273JR	CC,27KΩ,1/4W,5%	01121	5-10273
R15	RCR07G223JR	CC,22KΩ,1/4W,5%	01121	5-10223
R16	RCR07G223JR	CC,22KΩ,1/4W,5%	01121	5-10223
R17	RCR07G102JR	CC,1KΩ,1/4W,5%	01121	5-10102
R18	RCR07G102JR	CC,1KΩ,1/4W,5%	01121	5-10102
R19	RCR07G223JR	CC,22KΩ,1/4W,5%	01121	5-10223
R20	RCR07G332JR	CC,3.3KΩ,1/4W,5%	01121	5-10332
R21	360T502B	Var, Cer, 5KΩ	71450	5-73502
R22	RCR07G472JR	CC,4.7KΩ,1/4W,5%	01121	5-10472
R23	RCR07G101JR	CC,100Ω,1/4W,5%	01121	5-10101
R24	RCR07G392JR	CC,3.9KΩ,1/4W,5%	01121	5-10392
R25	RCR07G561JR	CC,560Ω,1/4W,5%	01121	5-10561
R26	RCR07G101JR	CC,100Ω,1/4W,5%	01121	5-10101
R27	RCR07G102JR	CC,1KΩ,1/4W,5%	01121	5-10102
R28	RCR07G472JR	CC,4.7KΩ,1/4W,5%	01121	5-10472
R29	RCR07G103JR	CC,10KΩ,1/4W,5%	01121	5-10103
R30	RCR07G103JR	CC,10KΩ,1/4W,5%	01121	5-10103
R31	RCR07G103JR	CC,10KΩ,1/4W,5%	01121	5-10103
R32	RCR07G331JR	CC,330Ω,1/4W,5%	01121	5-10331
R33	RCR07G101JR	CC,100Ω,1/4W,5%	01121	5-10101
R34	RCR07G564JR	CC,560KΩ,1/4W,5%	01121	5-10564
R35	RCR07G101JR	CC,100Ω,1/4W,5%	01121	5-10101
R36	-----	-----	----	-----
R37	RCR07G223JR	CC,22KΩ,1/4W,5%	01121	5-10223
R38	RCR07G471JR	CC,470Ω,1/4W,5%	01121	5-10471
R39	RCR07G103JR	CC,10KΩ,1/4W,5%	01121	5-10103

▲ PS941 ONLY
■ PS943 ONLY

Table 6-10. Parts List (Horizontal Board Sub-Assy 9405062) Con't

REFERENCE DESIGNATOR	MANUFACTURER PART NUMBER	DESCRIPTION	MANU-FACTURER	VU-DATA PART NO.
R40	RCR07G105JR	CC,1MΩ,1/4W,5%	01121	5-10105
R41	RCR07G100JR	CC,10Ω,1/4W,5%	01121	5-10100
R42	RCR07G101JR	CC,100Ω,1/4W,5%	01121	5-10101
R43	RCR07G272JR	CC,2.7KΩ,1/4W,5%	01121	5-10272
R44-N	RCR07G181JR	CC,180Ω,1/4W,5%	01121	5-10181
R45	360T501B	Var, Cer, 500Ω	71450	5-73501
R46	RCR07G222JR	CC,2.2KΩ,1/4W,5%	01121	5-10222
R47	RCR07G101JR	CC,100Ω 1/4W,5%	01121	5-10101
R48-N	RCR07G181JR	CC,180Ω,1/4W,5%	01121	5-10181
R49	RCR07G682JR	CC,6.8KΩ,1/4W,5%	01121	5-10682
R50	RCR07G512JR	CC,5.1KΩ,1/4W,5%	01121	5-10512
R51	RCR07G103JR	CC,10KΩ,1/4W,5%	01121	5-10103
R52	RCR07G104JR	CC,100KΩ,1/4W,5%	01121	5-10104
R53	RCR07G512JR	CC,5.1KΩ,1/4W,5%	01121	5-10512
R54	RCR07G104JR	CC,100KΩ,1/4W,5%	01121	5-10104
R55	RCR07G104JR	CC,100KΩ,1/4W,5%	01121	5-10104
R56	RCR07G100JR	CC,10Ω,1/4W,5%	01121	5-10100
R57	RCR07G103JR	CC,10KΩ,1/4W,5%	01121	5-10103
R58	RCR07G103JR	CC,10KΩ,1/4W,5%	01121	5-10103
R59	RCR07G102JR	CC,1KΩ,1/4W,5%	01121	5-10102
R60	RCR07G472JR	CC,4.7KΩ,1/4W,5%	01121	5-10472
R61	RCR07G472JR	CC,4.7KΩ,1/4W,5%	01121	5-10472
R62	RCR07G103JR	CC,10KΩ,1/4W,5%	01121	5-10103
R63	RCR07G102JR	CC,1KΩ,1/4W,5%	01121	5-10102
R64	RCR07G472JR	CC,4.7KΩ,1/4W,5%	01121	5-10472
R65	RCR07G102JR	CC,1KΩ,1/4W,5%	01121	5-10102
R66	RCR07G103JR	CC,10KΩ,1/4W,5%	01121	5-10103
R67	RCR07G102JR	CC,1KΩ,1/4W,5%	01121	5-10102
R68	RCR07G561JR	CC,560Ω,1/4W,5%	01121	5-10561
R69	RCR07G101JR	CC,100Ω,1/4W,5%	01121	5-10101
R70	RCR07G102JR	CC,1KΩ,1/4W,5%	01121	5-10102
R71	RN55D6491F	MF,6.49KΩ,1/8W,1%	91637	5-51281
R72	RCR07G101JR	CC,100Ω,1/4W,5%	01121	5-10101
R73	RN55D1001F	MF,1.00KΩ,1/8W,1%	91637	5-51193
R74	RCR07G104JR	CC,100KΩ,1/4W,5%	01121	5-10104
R75	RN55D2553F	MF,255KΩ,1/8W,1%	91637	5-51433
R76	RCR07G181JR	CC,180Ω,1/4W,5%	01121	5-10181
R77	RCR07G122JR	CC,1.2KΩ, 1/4W,5%	01121	5-10122
R78	RN55D3321F	MF,3.32KΩ,1/8W,1%	91637	5-51243
R79	RCR07G103JR	CC,10KΩ,1/4W,5%	01121	5-10103
R80	RN55D2490F	MF,249Ω,1/8W,1%	91637	5-51134
R81	RN55D3322F	MF,33.2KΩ,1/8W,1%	91637	5-51349

—N Indicates Nominal Value

Table 6-10. Parts List (Horizontal Board Sub-Assy 9405062) Con't

REFERENCE DESIGNATOR	MANUFACTURER PART NUMBER	DESCRIPTION	MANU-FACTURER	VU-DATA PART NO.
R82	RN55D2490F	MF,249Ω,1/8W,1%	91637	5-51134
R83	RCR07G103JR	CC,10KΩ,1/4W,5%	01121	5-10103
R84	RCR07G181JR	CC,180Ω,1/4W,5%	01121	5-10181
R85	RCR07G122JR	CC,1.2KΩ,1/4W,5%	01121	5-10122
R86	RN55D3321F	MF,3.32KΩ,1/8W,1%	91637	5-51243
R87	RN55D1102F	MF,11.0KΩ,1/8W,1%	91637	5-51303
R88	RN55D1102F	MF,11.0KΩ,1/8W,1%	91637	5-51303
R89	RCR07G512JR	CC,5.1KΩ,1/4W,5%	01121	5-10512
R90	RN55D3321F	MF,3.32KΩ,1/8W,1%	91637	5-51243
R91	RCR07G122JR	CC,1.2KΩ,1/4W,5%	01121	5-10122
R92	RCR07G181JR	CC,180Ω,1/4W,5%	01121	5-10181
R93	RCR07G103JR	CC,10KΩ,1/4W,5%	01121	5-10103
R94	RN55D2490F	MF,249Ω,1/8W,1%	91637	5-51134
R95	RN55D2490F	MF,249Ω,1/8W,1%	91637	5-51134
R96	RN55D3322F	MF,33.2KΩ,1/8W,1%	91637	5-51349
R97	RCR07G103JR	CC,10KΩ,1/4W,5%	01121	5-10103
R98	RN55D3321F	MF,3.32KΩ,1/8W,1%	91637	5-51243
R99	RCR07G122JR	CC,1.2KΩ,1/4W,5%	01121	5-10122
R100	RCR07G181JR	CC,180Ω,1/4W,5%	01121	5-10181
R101	360T202B	Var, Cer, 2KΩ	71450	5-73202
R102	RCR07G331JR	CC,330Ω,1/4W,5%	01121	5-10331
R103	360T254B	Var, Cer, 250KΩ	71450	5-73254
R104	360T502B	Var, Cer, 5KΩ	71450	5-73502
R105	RCR07G102JR	CC,1KΩ,1/4W,5%	01121	5-10102
R106	-----	-----	----	-----
R107	RCR07G102JR	CC,1KΩ,1/4W,5%	01121	5-10102
R108 ▲	360T104B	Var, Cer, 100KΩ	71450	5-73104
R109	RCR07G221JR	CC,220Ω,1/4W,5%	01121	5-10221
R110	360T253B	Var, Cer, 25KΩ	71450	5-73253
R111	RCR07G102JR	CC,1KΩ,1/4W,5%	01121	5-10102
R112	RCR07G392JR	CC,3.9KΩ,1/4W,5%	01121	5-10392
R113	RCR07G392JR	CC,3.9KΩ,1/4W,5%	01121	5-10392
R114	RN55D6650F	MF,665Ω,1/8W,1%	91637	5-51175
R115	360T201B	Var, Cer, 200Ω	71450	5-73201
R116	RN55D8251F	MF,8.25KΩ,1/8W,1%	91637	5-51291
R117	RN55D3922F	MF,39.2KΩ,1/8W,1%	91637	5-51356
R118	RCR07G153JR	CC,15KΩ,1/4W,5%	01121	5-10153
R119	RCR07G101JR	CC,100Ω,1/4W,5%	01121	5-10101
R120	RCR07G752JR	CC,7.5KΩ,1/4W,5%	01121	5-10752
R121, S5	2432001-1	Var, Car, 20KΩ, Mod Pot	34160	5-78203
R122	RCR07G273JR	CC,27KΩ,1/4W,5%	01121	5-10273
R123-N	RCR07G181JR	CC,180Ω,1/4W,5%	01121	5-10181

—N Indicates Nominal Value
▲ PS941 ONLY

Table 6-10. Parts List (Horizontal Board Sub-Assy 9405062) Con't

REFERENCE DESIGNATOR	MANUFACTURER PART NUMBER	DESCRIPTION	MANU-FACTURER	VU-DATA PART NO.
R124	RCR07G101JR	CC,100Ω,1/4W,5%	01121	5-10101
R125	RCR07G101JR	CC,100Ω,1/4W,5%	01121	5-10101
R126-R129	-----	-----	----	-----
R130	RCR07G102JR	CC,1KΩ,1/4W,5%	01121	5-10102
R131	RCR07G	CC,TBD	01121	5-10
R132-R149	-----	Not Used	----	-----
R150 ■	360T254B	Var, Cer, 250KΩ	71450	5-73254
R151 ■	RCR07G563JR	CC,56KΩ,1/4W,5%	01121	5-10563
R152 ■	RCR07G333JR	CC,33KΩ,1/4W,5%	01121	5-10333
R153 ■	RCR07G224JR	CC,220KΩ,1/4W,5%	01121	5-10224
R154 ■	RCR07G333JR	CC,33KΩ,1/4W,5%	01121	5-10333
R155 ■	RCR07G224JR	CC,220KΩ,1/4W,5%	01121	5-10224
R156 ■	RN55D5492F	MF,54.9KΩ,1/8W,1%	91637	5-51369
R157 ■	RCR07G223JR	CC,22KΩ,1/4W,5%	01121	5-10223
R158 ■	RCR07G563JR	CC,56KΩ,1/4W,5%	01121	5-10563
		SWITCHES		
S1	9402017	Sweep Switch	34160	2-10035
S2	71AF36-01-2-5N	Mode, 2P 5P	81073	2-10057
S3	71AY23780-2-5N	Trig Mode, 2P 5P	81073	2-10058
S4	-----	Reference S1	----	-----
S5	-----	Reference R121	----	-----
		TERMINALS		
TP1	2970-01-03	Terminal	Cambion	2-23998
TP2	2970-01-03	Terminal	Cambion	2-23998
TP3	2970-01-03	Terminal	Cambion	2-23998
TP4	2970-01-03	Terminal	Cambion	2-23998
TP5	2970-01-03	Terminal	Cambion	2-23998
		TRANSISTORS		
Q1	UC410	Fet	Solitron	3-20410
Q2	2N4275	NPN, Signal	07263	3-24275
Q3	2N4275	NPN, Signal	07263	3-24275
Q4	2N4870	Uni Junction	04713	3-24870
Q5	2N3904	NPN, Signal	04713	3-23904
Q6	2N3694	NPN, Signal	07263	3-23694
Q7	2N4275	NPN, Signal	07263	3-24275
Q8	2N4275	NPN, Signal	07263	3-24275
Q9	2N4275	NPN, Signal	07263	3-24275
Q10	2N4275	NPN, Signal	07263	3-24275
Q11	MPSH54	PNP, Signal	04713	3-20054

■ PS943 ONLY

Table 6-10. Parts List (Horizontal Board Sub-Assy 9405062) Con't

REFERENCE DESIGNATOR	MANUFACTURER PART NUMBER	DESCRIPTION	MANU-FACTURER	VU-DATA PART NO.
Q12	MPSH04	NPN, Signal	04713	3-20004
Q13	MPSH04	NPN, Signal	04713	3-20004
Q14	MPSH54	PNP, Signal	04713	3-20054
Q15	2N5401	PNP, Signal	04713	3-25401
Q16	MPSH54	PNP, Signal	04713	3-20054
Q17	MPSH04	NPN, Signal	04713	3-20004
Q18	MPSH54	PNP, Signal	04713	3-20054
Q19	2N3904	NPN, Signal	04713	3-23904
Q20	2N5550	NPN, Signal	04713	3-25550
Q21	2N3904	NPN, Signal	04713	3-23904
Q22	2N3904	NPN, Signal	04713	3-23904
Q23	2N5401	PNP, Signal	04713	3-25401
Q24	MPSH54	PNP, Signal	04713	3-20054
Q25	MPSH04	NPN, Signal	04713	3-20004
Q26	MPSH54	PNP, Signal	04713	3-20054
Q27	2N3904	NPN, Signal	04713	3-23904
Q28	2N5550	NPN, Signal	04713	3-25550
Q29	2N3904	NPN, Signal	04713	3-23904
Q30 ■	2N3694	NPN, Signal	07263	3-23694
Q31 ■	2N3694	NPN, Signal	07263	3-23694
Q32	2N3904	NPN, Signal	04713	3-23904
		HARDWARE		
1 Req.	2373	Spacer, 4-40x3/4	83330	4-20166
2 Req.	MS51957-15	Screw,Panhd,4-40x3/8	----	8-10015
4 Req.	MS35333-70	Washer, #4, INT LK	----	8-40002
2 Req.	570-1510-01-0519	Standoff	Cambion	4-20199
2 Req.	MS51957-12	Screw,Panhd,4-40x3/16	----	8-10012
1 Req.	9402074	Sweep Mag. Bracket	34160	1-10652

■ PS943 Only

Table 6-11. Parts List (Power Supply Assembly 9405027)

REFERENCE DESIGNATOR	MANUFACTURER PART NUMBER	DESCRIPTION	MANU-FACTURER	VU-DATA PART NO.
1 Req.	9405028	Power Supply Board Sub-Assy	34160	-----
T201	9402001	Power Transformer	34160	7-61010
1 Req.	9402041	Fuse Bracket	34160	1-10631
1 Req.	9402033	Rear Panel	34160	1-10623
1 Req.	9402056	Power Supply Shield	34160	1-20074
J201	EAC-301	AC Power Receptacle	Switchcraft	2-24000
S202	46206LFR	Slide Switch, 115/230	Switchcraft	2-10025
S201	7203w/J Rocker	Switch, DPTT	C&K	2-10031
XF201	HMM	Fuse Holder	Buss	2-40007
F201	3AG.25ASB	Fuse, 1/4A Slo Blo	Buss	2-40004
J204	G3-1000-101	Test Jack, White	83330	2-50009
1 Req.	101	Banana Jack	83330	2-24011
4 Req.	8328	Spacer, 4-40 x 1 1/4	83330	2-20107
4 Req.	8766	Spacer, 4-40 x 5/16	83330	4-20159
1 Req.	1410-4	Terminal Lug, #4 INT LK	83330	-----
J202	2142-0	Banana Jack — Black	Pomona	4-20157
J203	2142-2	Banana Jack — Red	Pomona	4-20158
4 Req.	8700	Spacer, 1/8" L	83330	4-20163
1 Req.	9402071	Shield, Magnetic	34160	1-10647
3 Req.	9402105	Power Connector BKT	34160	1-10758
		HARDWARE		
5 Req.	MS51957-15	Screw,Panhd,4-40x3/8"	----	8-10015
4 Req.	MS51957-21	Screw,Panhd, 4-40x1"	----	8-10021
11 Req.	MS24693-4	Screw,Flathd,4-40x3/8"	----	8-20015
13 Req.	MS35333-70	Lockwasher, #4 INT	----	8-40002
2 Req.	NAS671C4	Nut, 4-40, Plain Hex	----	8-30005
2 Req.	MS51957-14	Screw,Panhd,4-40x5/16"	----	8-10014
3 Req.	MS24693-2	Screw,Flathd,4-40x1/4"	----	8-20013

Table 6-12. Parts List (Power Supply Sub-Assy 9405028)

REFERENCE DESIGNATOR	MANUFACTURER PART NUMBER	DESCRIPTION	MANU-FACTURER	VU-DATA PART NO.
1 Req.	9403028	Etched Circuit Board	34160	1-20072
		CAPACITORS		
C1	------	------	----	------
C2	601D108G025GL4	Elect, 1000μf,25V	56289	6-84102
C3	T362D107M020AS	Tant, 100μf±20%,20V	05397	6-74107
C4	DC-503	CD, .05μf±20%,100V	71590	6-29050
C5	T362D227M010AS	Tant, 220μf±20%,10V	05397	6-76227
C6	DC-503	CD, .05μf±20%,100V	71590	6-29050
C7	DDM-103	CD, .01μf+60-40%,150V	71590	6-27103
C8	1802Z5U050A104Z	MonoCer,.1μf+80-20%,50V	Varadyne	6-36104
C9	1802Z5U050A104Z	MonoCer,.1μf+80-20%,50V	Varadyne	6-36104
C10	1802Z5U050A104Z	MonoCer,.1μf+80-20%,50V	Varadyne	6-36104
C11	T362D227M010AS	Tant, 220μf±20%,10V	05397	6-76227
C12	T362D227M010AS	Tant, 220μf±20%,10V	05397	6-76227
C13	T362D337M006AS	Tant, 330μf±20%,6V	05397	6-71337
C14	T362D337M006AS	Tant, 330μf±20%,6V	05397	6-71337
C15	T362D227M010AS	Tant, 220μf±20%,10V	05397	6-76227
C16	T362D227M010AS	Tant, 220μf±20%,10V	05397	6-76227
C17	T362D476M035AS	Tant, 47μf±20%,35V	05397	6-75476
C18	T362D476M035AS	Tant, 47μf±20%,35V	05397	6-75476
C19	500D605F100CC7	Elect, 6μf, 100V	56289	6-87605
C20	500D605F100CC7	Elect, 6μf, 100V	56289	6-87605
C21	DDM-103	CD, .01μf+60-40%,150V	71590	6-27103
C22	1802Z5U050A104Z	MonoCer,.1μf+80-20%,50V	Varadyne	6-36104
C23	1802Z5U050A104Z	MonoCer,.1μf+80-20%,50V	Varadyne	6-36104
C24	5HK-P10	CD, .1μf+80-20%,500V	56289	6-29103
C25	5HK-P10	CD, .1μf+80-20%,500V	56289	6-29103
C26	30GAS10	CD, .01μf±20%,3KV	56289	6-29104
C27	30GAS10	CD, .01μf±20%,3KV	56289	6-29104
C28	30GAS10	CD, .01μf±20%,3KV	56289	6-29104
C29	30GAS10	CD, .01μf±20%,3KV	56289	6-29104
C30	30GAS10	CD, .01μf±20%,3KV	56289	6-29104
C31	------	TBD	----	------
C32	------	TBD	----	------
C33-N	DM15-821J	DM, 820Pf±5%,500V	04062	6-19821
C34	T362B686M006AS	Tant, 68μf±20%,6V	05397	6-71686
C35	1801Z5U050A223Z	MonoCer,.022+80-20%,50V	Varadyne	6-36223
C36	DDM-103	CD, .01μf+60-40%,150V	71590	6-27103
C37	DM15-180J	DM, 18Pf±5%,500V	04062	6-19180
C38	DDM-103	CD, .01μf+60-40%,150V	71590	6-27103
C39-N	DM15-471J	DM, 470Pf±5%,500V	04062	6-19471
C40	DC-503	CD,.05uf ±20%,100V	71590	6-29050

—N Indicates Nominal Value

Table 6-12. Parts List (Power Supply Sub-Assy 9405028) Con't

REFERENCE DESIGNATOR	MANUFACTURER PART NUMBER	DESCRIPTION	MANU-FACTURER	VU-DATA PART NO.
		CHOKES		
L1	1537-76	100μHy	99800	5-90007
L2	1537-76	100μHy	99800	5-90007
L3	1537-76	100μHy	99800	5-90007
		DIODES		
CR1 *	1N4004	Power, 1AMP, 400V	07263	3-14004
CR2	1N4004	Power, 1AMP, 400V	07263	3-14004
CR3	1N4004	Power, 1AMP, 400V	07263	3-14004
CR4	-----	-----	----	-----
CR5	1N965B	Zener, 15V	04713	3-10965
CR6	1N914	GP, Signal	07263	3-10914
CR7	1N914	GP, Signal	07263	3-10914
CR8	1N914	GP, Signal	07263	3-10914
CR9	1N5232A	Zener, 15V	04713	3-15232
CR10	1N914	GP, Signal	07263	3-10914
CR11	1N914	GP, Signal	07263	3-10914
CR12	1N4004	Power, 1AMP, 400V	07263	3-14004
CR13	1N4004	Power, 1AMP, 400V	07263	3-14004
CR14	1N4004	Power, 1AMP, 400V	07263	3-14004
CR15	1N4004	Power, 1AMP, 400V	07263	3-14004
CR16	1N4004	Power, 1AMP, 400V	07263	3-14004
CR17	1N4004	Power, 1AMP, 400V	07263	3-14004
CR18	1N4004	Power, 1AMP, 400V	07263	3-14004
CR19	1N4004	Power, 1AMP, 400V	07263	3-14004
CR20	1N4004	Power, 1AMP, 400V	07263	3-14004
CR21	1N4004	Power, 1AMP, 400V	07263	3-14004
CR22	1N4004	Power, 1AMP, 400V	07263	3-14004
CR23	1N4004	Power, 1AMP, 400V	07263	3-14004
CR24	1N4004	Power, 1AMP, 400V	07263	3-14004
CR25	1N4004	Power, 1AMP, 400V	07263	3-14004
CR26	1N4004	Power, 1AMP, 400V	07263	3-14004
CR27	1N4004	Power, 1AMP, 400V	07263	3-14004
CR28	1N4004	Power, 1AMP, 400V	07263	3-14004
CR29	1N4004	Power, 1AMP, 400V	07263	3-14004
CR30	1N914	GP, Signal	07263	3-10914
CR31	1N914	GP, Signal	07263	3-10914
CR32	SEF40	Rectifier	14099	3-10340
CR33	SEF40	Rectifier	14099	3-10340
CR34	SEF40	Rectifier	14099	3-10340
CR35	SEF40	Rectifier	14099	3-10340
CR36	1N982B	Zener, 75V	04713	3-10982

*All 1N4004's Fairchild Only

Table 6-12. Parts List (Power Supply Sub-Assy 9405028) Con't

REFERENCE DESIGNATOR	MANUFACTURER PART NUMBER	DESCRIPTION	MANU-FACTURER	VU-DATA PART NO.
CR37	1N914	GP, Signal	07263	3-10914
CR38	1N914	GP, Signal	07263	3-10914
CR39	1N914	GP, Signal	07263	3-10914
CR40	1N914	GP, Signal	07263	3-10914
CR41	1N914	GP, Signal	07263	3-10914
F1	3AG1.5APT	Fuse, 1.5AMP, FB	Littlefuse	2-40013
		INTEGRATED CIRCUITS		
U1	LM301A	Amplifier	Nat'l	3-30301
U2	LM301A	Amplifier	Nat'l	3-30301
15 Req.	02-015-113-3-200	Elco Pin, 1/16" Card	Elco	2-29993
		RESISTORS		
R1	RCR07G331JR	CC, 300Ω, 1/4W,5%	01121	5-10331
R2-N	RCR20G1R5JR	CC, 1.5Ω, 1/2W,5%	01121	5-20015
R3	RCR07G3R3JR	CC, 3.3Ω, 1/4W,5%	01121	5-10033
R4	-----	TBD	----	-----
R5	-----	-----	----	-----
R6	RCR07G101JR	CC, 100Ω, 1/4W,5%	01121	5-10101
R7	RCR07G103JR	CC, 10KΩ, 1/4W,5%	01121	5-10103
R8	RCR07G471JR	CC, 470Ω, 1/4W,5%	01121	5-10471
R9	RN55D1652F	MF, 16.5KΩ, 1/8W,1%	91637	5-51320
R10	360T103B	Var, Cer, 10KΩ	71450	5-73103
R11	RN55D1002F	MF, 10.0KΩ,1/8W,1%	91637	5-51299
R12	RCR07G331JR	CC, 330Ω, 1/4W,5%	01121	5-10331
R13	RCR07G102JR	CC, 1KΩ, 1/4W,5%	01121	5-10102
R14	RCR07G331JR	CC, 330Ω, 1/4W,5%	01121	5-10331
R15	RCR07G100JR	CC, 10Ω, 1/4W,5%	01121	5-10100
R16	RCR07G100JR	CC, 10Ω, 1/4W,5%	01121	5-10100
R17	RCR07G273JR	CC, 27KΩ, 1/4W,5%	01121	5-10273
R18	RCR07G562JR	CC, 5.6KΩ,1/4W,5%	01121	5-10562
R19	RCR07G472JR	CC, 4.7KΩ, 1/4W,5%	01121	5-10472
R20	-----	-----	----	-----
R21	-----	-----	----	-----
R22	-----	-----	----	-----
R23	-----	-----	----	-----
R24	360T105B	Var, Cer, 1MΩ	71450	5-73105
R25	RCR20G105JR	CC, 1MΩ, 1/2W,5%	01121	5-20105
R26	RCR07G101JR	CC, 100Ω, 1/4W,5%	01121	5-10101
R27	RCR07G332JR	CC, 3.3KΩ, 1/4W,5%	01121	5-10332

—N Indicates Nominal Value

Table 6-12. Parts List (Power Supply Sub-Assy 9405028) Con't

REFERENCE DESIGNATOR	MANUFACTURER PART NUMBER	DESCRIPTION	MANU-FACTURER	VU-DATA PART NO.
R28	RCR07G473JR	CC, 47KΩ, 1/4W,5%	01121	5-10473
R29	RCR07G103JR	CC, 10KΩ, 1/4W,5%	01121	5-10103
R30	RCR07G332JR	CC, 3.3KΩ, 1/4W,5%	01121	5-10332
R31	RCR07G393JR	CC, 39KΩ, 1/4W,5%	01121	5-10393
R32	RCR07G333JR	CC, 33KΩ, 1/4W,5%	01121	5-10333
R33	RCR07G472JR	CC, 4.7KΩ, 1/4W, 5%	01121	5-10472
R34	360T102B	Var, Cer, 1KΩ	71450	5-73102
R35	RCR07G681JR	CC, 680Ω, 1/4W,5%	01121	5-10681
R36	RCR07G222JR	CC, 2.2KΩ, 1/4W,5%	01121	5-10222
R37	RCR07G123JR	CC, 12KΩ, 1/4W,5%	01121	5-10123
R38	RCR20G5R1JR	CC,5.1Ω, 1/2W,5%	01121	5-20051
		TERMINALS		
2 Req.	2000c	Bifurcated	USECO	2-24010
----	2000c	Bifurcated	USECO	2-24010
TP1	2970-01-03	Terminal	Cambion	2-23998
TP2	2970-01-03	Terminal	Cambion	2-23998
TP3	2970-01-03	Terminal	Cambion	2-23998
		TRANSFORMERS		
T1	9402000	DC to DC Converter	34160	7-61015
		TRANSISTORS		
Q1	D44H2	NPN, Power	GE	3-24442
Q2	2N3694	NPN, Signal	07263	3-23694
Q3	D44H2	NPN, Power	GE	3-24442
Q4	D44H2	NPN, Power	GE	3-24442
Q5	D44H2	NPN, Power	GE	3-24442
Q6	2N5401	PNP, Signal	04713	3-25401
Q7	2N4275	NPN, Signal	07263	3-24275
Q8	2N4275	NPN, Signal	07263	3-24275
Q9	2N4275	NPN, Signal	07263	3-24275
Q10	2N3904	NPN, Signal	04713	3-23904
Q11	2N3694	NPN, Signal	07263	3-23694
		HARDWARE		
1 Req.	2342	Spacer, 1/2"L	83330	4-20106
1 Req.	MS51957-19	Screw,Panhd,4-40x3/4	----	8-10019
3 Req.	MS35333-70	Washer,4-40 INT LK	----	8-40002
1 Req.	9402044	Heat Sink Plate	34160	1-10633
2 Req.	MS24693-4	Screw,Flathd,4-40x3/8	----	8-20015
2 Req.	NAS671C4	Nut,4-40 Plain Hex	----	8-30005
2 Req.	DF-103C	Mica Insulator	86684	4-20297
2 Req.	DF-137A	Washer, Insulating	86684	8-60003

Table 6-13. Parts List (Display Assembly 9405029)

REFERENCE DESIGNATOR	MANUFACTURER PART NUMBER	DESCRIPTION	MANU-FACTURER	VU-DATA PART NO.
1 Req.	9405030	Master Bd. Sub-Assy	34160	-----
1 Req.	9405031	Vert. Output Sub-Assy	34160	-----
1 Req.	9402030	Frt. Panel — Display Sect.	34160	1-10619
V301	D10-240GH	Cathode Ray Tube	Brimar	3-40003
1 Req.	9402026	CRT Shield	34160	1-10617
1 Req.	9402020	CRT Filter	34160	4-20130
1 Req.	9403010	Graticule	34160	4-20131
1 Req.	9402035-1	Front CRT Support — Top	34160	1-10625
1 Req.	9402035-2	Front CRT Support — Bott.	34160	1-10808
1 Req.	9402036	Rear CRT Support	34160	1-10626
1 Req.	9402040	CRT — Master Bd. Bracket	34160	1-10630
2 Req.	9402052	Vert. Output Bd. Bkt.	34160	1-10635
L201	9402027	Trace Angle Coil	34160	5-90004
1 Req.	9402054	Delay Cable	34160	2-70009
1 Req.	9402034	Center Shield	34160	1-10624
1 Req.	9402037	Channel Brace	34160	1-10627
1 Req.	9402111-1	Insulator, Center Shield	34160	4-20271
1 Req.	9402111-3	Insulator, Center Shield	34160	4-20273
2 Req.	RN55D2001F	Res, MF, 2KΩ, 1/8W, 1%	91637	5-51222
1 Req.	651	Anode Clip	83330	4-20141
1 Req.	8787	Spacer, 4-40 x 15/16"	83330	4-20160
1 Req.	2374	Spacer, 4-40 x 1"	83330	4-20161
1 Req.	GSPC Size 2	Grommet, Caterpillar, 1 3/4	ICO-Rally	4-20299
1 Req.	SB-250-2	Snap Bushing	Heyco	2-45006
		HARDWARE		
8 Req.	MS24693-3	Screw,Flathd,4-40x5/16"	----	8-20014
5 Req.	MS51957-13	Screw,Panhd,4-40x1/4"	----	8-10013
4 Req.	MS51957-14	Screw,Panhd,4-40x5/16"	----	8-10014
4 Req.	MS51957-15	Screw,Panhd,4-40x3/8"	----	8-10015
13 Req.	MS35333-70	Washer,4-40 INT LK	----	8-40002
9 Req.	NAS671C4	Nut, 4-40 Plain Hex	----	8-30005
A/R	-----	Loctite	----	-----

Table 6-14. Parts List (Master Board Sub-Assy 9405030)

REFERENCE DESIGNATOR	MANUFACTURER PART NUMBER	DESCRIPTION	MANU-FACTURER	VU-DATA PART NO.
1 Req.	9403030	Etched Circuit Bd.	34160	1-20069
		CAPACITORS		
C301	5GA-S10	CD, .01μf±20%,1KV	56289	6-29053
C302	5HKS-S10	CD, .01μf+80-20%,500V	56289	6-28103
C303	DC-503	CD, .05μf±20%,100V	56289	6-29050
C304	DC-503	CD, .05μf±20%,100V	56289	6-29050
11 Req.	02-011-114-3-200	Elco Pin, 3-32" Card	Elco	2-29992
24 Req.	02-024-114-3-200	Elco Pin, 3-32" Card	Elco	2-29992
15 Req.	02-015-014-5-200	Elco Pin, 3-32" Card	Elco	2-29990
		RESISTORS		
R301	RCR20G825JR	CC, 8.2MΩ, 1/2W, 5%	01121	5-20825
R302	RCR20G515JR	CC, 5.1MΩ, 1/2W, 5%	01121	5-20515
R303	RCR20G393JR	CC, 3.9MΩ, 1/2W, 5%	01121	5-20393
R304-N	RCR07G103JR	CC, 10KΩ, 1/4W, 5%	01121	5-10103
R305	-----	-----	----	-----
R306	RCR07G102JR	CC, 1KΩ, 1/4W, 5%	01121	5-10102
		HARDWARE		
2 Req.	9402042	Master Bd. Bracket	34160	1-10632
2 Req.	MS51957-13	Screw,Panhd,4-40x1/4"	----	8-10013
2 Req.	MS35333-70	Washer, #4 INT LK	----	8-40002
2 Req.	NAS671C4	Nut, 4-40, Plain Hex	----	8-30005
XV301	B12F	Socket, CRT	Inter-Tech Group, Inc.	2-60006

—N Indicates Nominal Value

Table 6-15. Parts List (Vertical Output Sub-Assy 9405031)

REFERENCE DESIGNATOR	MANUFACTURER PART NUMBER	DESCRIPTION	MANU-FACTURER	VU-DATA PART NO.
1 Req.	9403031	Etched Circuit Bd.	34160	1-20070
		CAPACITORS		
C1	T362C476M020AS	Tant, 47μf±20%,20V	05397	6-74476
C2	1802Z5U050A104Z	MonoCer,.1μf+80-20%,50V	Varadyne	6-36104
C3	T362C476M020AS	Tant, 47μf±20%,20V	05397	6-74476
C4	1802Z5U050A104Z	MonoCer,.1μf+80-20%,50V	Varadyne	6-36104
C5	1802Z5U050A104Z	MonoCer,.1μf+80-20%,50V	Varadyne	6-36104
C6	T362C476M020AS	Tant, 47μf±20%,20V	05397	6-74476
C7	1802Z5U050A104Z	MonoCer,.1μf+80-20%,50V	Varadyne	6-36104
C8	1802Z5U050A104Z	MonoCer,.1μf+80-20%,50V	Varadyne	6-36104
C9-N	DM15-680J	DM, 68Pf± 5%, 500V	04062	6-19680
C10	DC-503	CD,.05μf±20%,100V	56289	6-29050
C11	DDM-103	CD,.01μf+60-40%,150V	71590	6-27103
		CHOKES		
L1	.115 x .125	Ferrite Bead	Amidon	5-90001
L2	.115 x .125	Ferrite Bead	Amidon	5-90001
		DIODES		
CR1	MBD701	Schottky	04713	3-10701
CR2	MBD701	Schottky	04713	3-10701
CR3	IN914	GP, Signal	07263	3-10914
CR4	IN914	GP, Signal	07263	3-10914
CR5	IN914	GP, Signal	07263	3-10914
CR6	IN914	GP, Signal	07263	3-10914
		INTEGRATED CIRCUITS		
U1	733HC	AMP, 733	07263	3-30733
		RESISTORS		
R1	RN55D3321F	MF, 3.32KΩ, 1/8W, 1%	91637	5-51243
R2	RCR07G100JF	CC, 10Ω, 1/4W, 5%	01121	5-10100
R3	360T501B	Var, Cer, 500Ω	71450	5-73501
R4	RN55D1001F	MF, 1.00KΩ, 1/8W, 1%	91637	5-51193
R5	RN55D1001F	MF, 1.00KΩ, 1/8W, 1%	91637	5-51193
R6	RCR07G100JR	CC, 10Ω, 1/4W, 5%	01121	5-10100
R7	360T101B	Var, Cer, 100Ω	71450	5-73101
R8	RCR07G680JR	CC, 68Ω, 1/4W, 5%	01121	5-10680
R9	RCR07G680JR	CC, 68Ω, 1/4W, 5%	01121	5-10680
R10-N	RCR07G101JR	CC, 100Ω, 1/4W, 5%	01121	5-10101
R11	RCR07G151JR	CC, 150Ω, 1/4W, 5%	01121	5-10151

—N Indicates Nominal Value

Table 6-15. Parts List (Vertical Output Sub-Assy 9405031) Con't

REFERENCE DESIGNATOR	MANUFACTURER PART NUMBER	DESCRIPTION	MANU-FACTURER	VU-DATA PART NO.
R12	RCR07G151JR	CC, 150Ω, 1/4W, 5%	01121	5-10151
R13	RCR07G152JR	CC, 1.5KΩ, 1/4W, 5%	01121	5-10152
R14	RCR07G152JR	CC, 1.5KΩ, 1/4W, 5%	01121	5-10152
3 Req.	2970-01-03	Terminal	Cambion	2-23998
		TRANSISTORS		
Q1	MPSH34	NPN, Signal	04713	3-20034
Q2	MPSH34	NPN, Signal	04713	3-20034
Q3	MPSH34	NPN, Signal	04713	3-20034
Q4	MPSH34	NPN, Signal	04713	3-20034

SECTION VII

DRAWINGS

List of Drawings:

Figure 7-1. Horizontal Assembly Schematic 9401062
Horizontal Assembly Schematic 9401062 (Continued)
Figure 7-2. Vertical Assembly Schematic 9401024
Figure 7-3. Power Supply Assembly Schematic 9401028
Figure 7-4. Vertical Output Schematic 9401031
Figure 7-5. Master Board Schematic 9401030

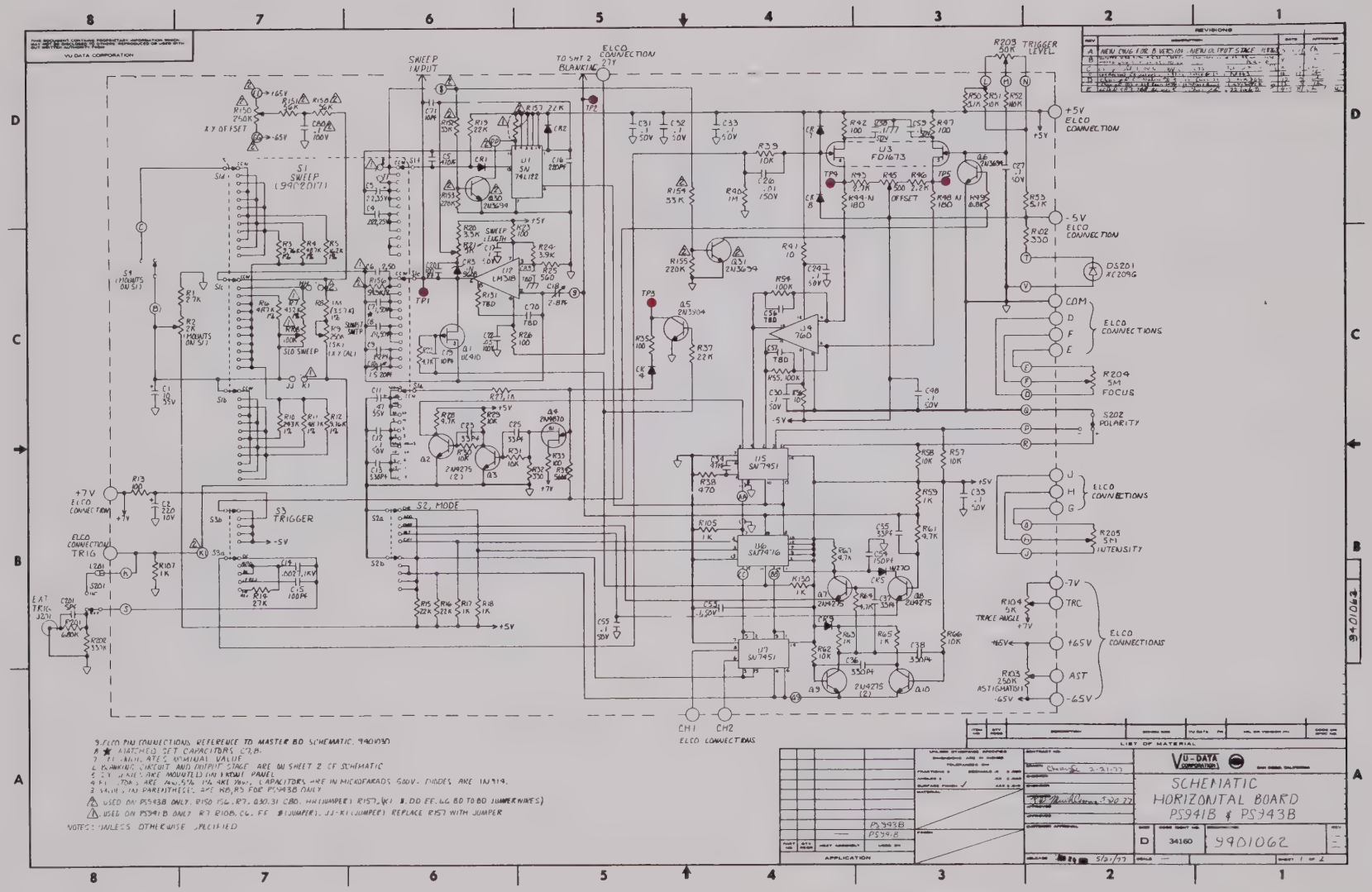

Figure 7-1. Horizontal Assembly Schematic 9401062

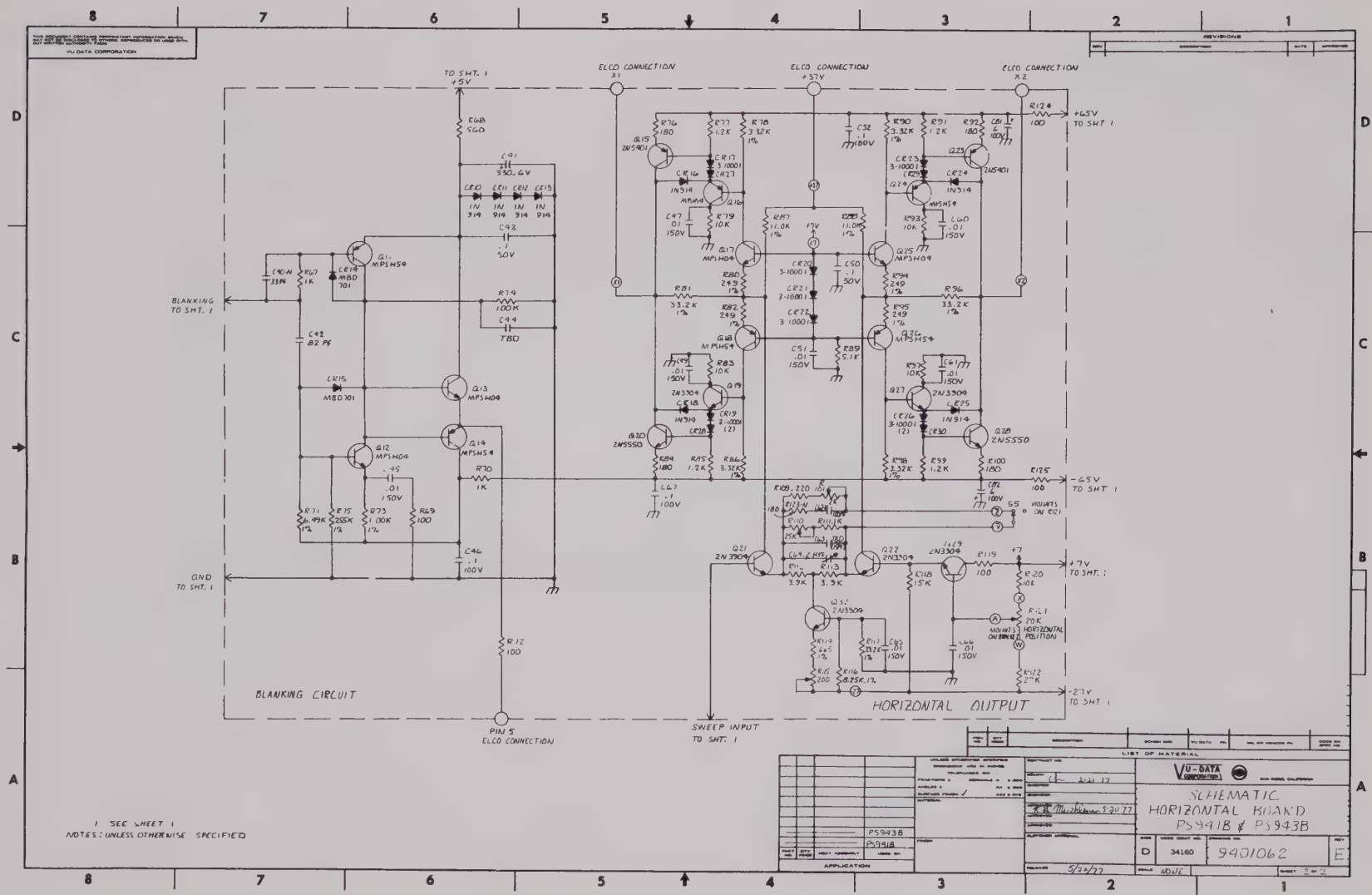

Figure 7-1. Horizontal Assembly Schematic 9401062 (Continued)

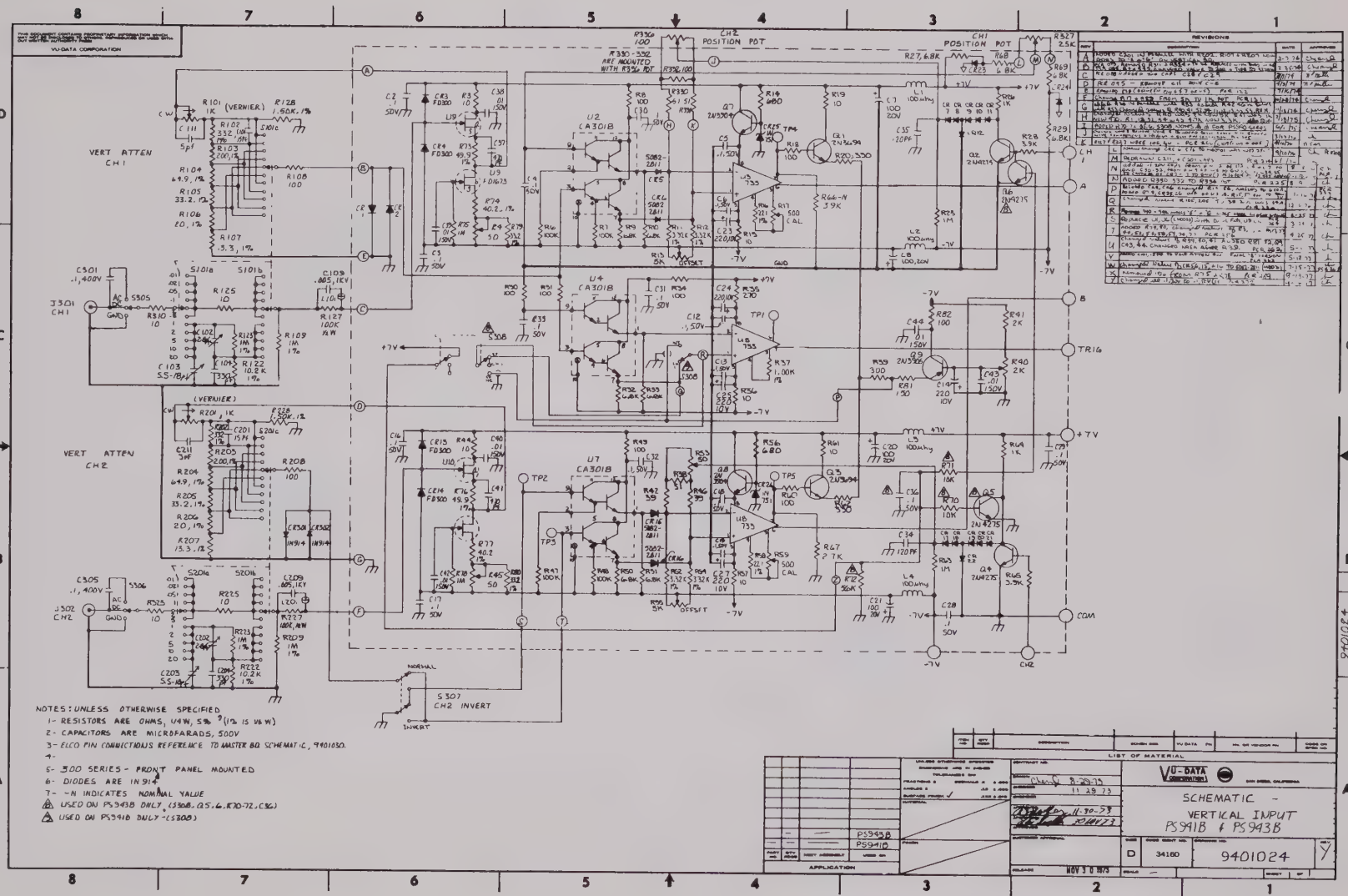

Figure 7-2. Vertical Assembly Schematic 9401024

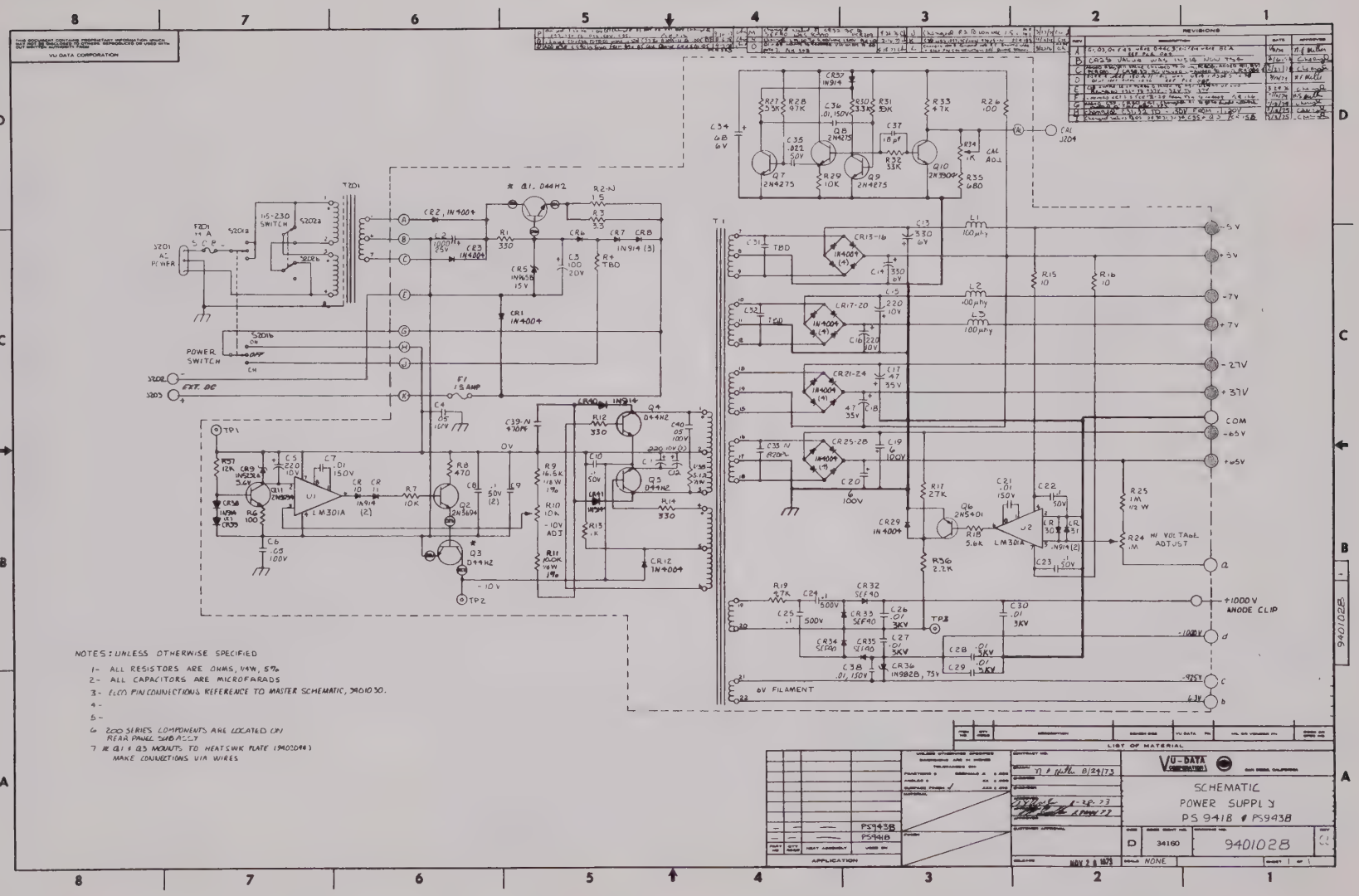

Figure 7-3. Power Supply Assembly Schematic 9401028

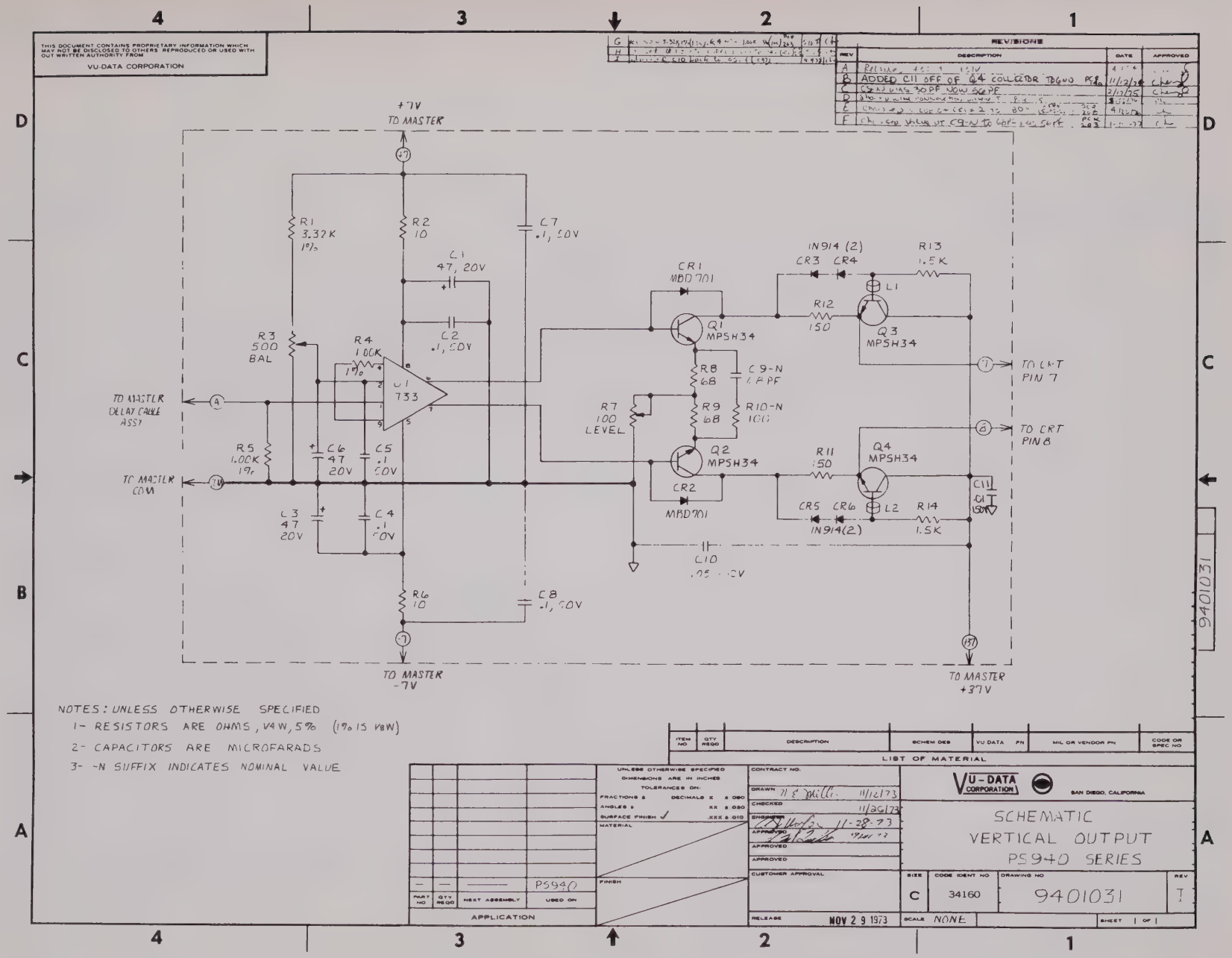

Figure 7-4. Vertical Output Schematic 9401031

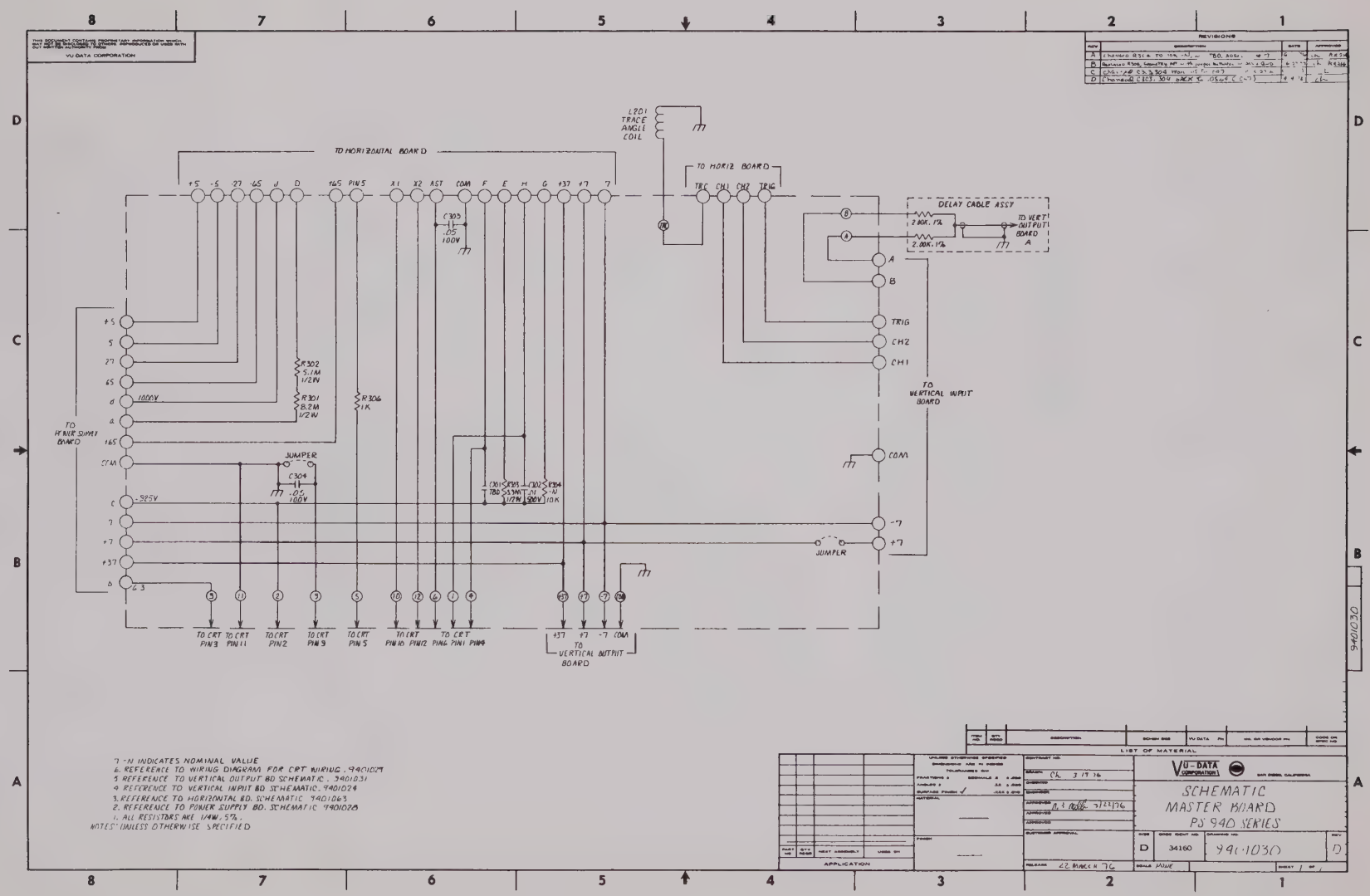

Figure 7-5. Master Board Schematic 9401030

WARRANTY

VU-DATA warrants to the original Buyer of goods of VU-DATA design and manufacture for a period of one (1) year from the date of shipment from VU-DATA that the goods under the order will be of merchantable quality free from defects in material, workmanship and design each as determined at the date of shipment by VU-DATA. VU-DATA will not be liable for any design or design modification requested by or furnished by Buyer and incorporated into the goods.

Satisfaction of this warranty will be limited to replacement or repair or modification of, or issuance of credit for the goods involved at VU-DATA'S option. Repair or modification of the goods must be performed at VU-DATA or at any repair center authorized by VU-DATA to make such repairs or modifications as may be necessary. Buyer shall be responsible for transportation to the point of repair and for return shipment to Buyer. Such warranty satisfaction is available only if Buyer promptly notifies VU-DATA in writing upon discovery of the alleged defect and obtains from VU-DATA authorization for the return of the goods and VU-DATA'S examination of subject goods discloses that any defect is not the result of misuse; neglect; improper installation; improper operation; improper maintenance or repair; accident; or unusual deterioration or degradation due to electrical or electromagnetic environment. Should VU-DATA'S examination of subject goods determine that no defect exists, Buyer shall be assessed a calibration charge of fifty dollars ($50.00).

THE WARRANTY DESCRIBED HEREIN SHALL BE IN LIEU OF ANY OTHER WARRANTY, EXPRESSED OR IMPLIED, INCLUDING BUT NOT LIMITED TO, ANY IMPLIED WARRANTIES OF MERCHANTABILITY OR FITNESS FOR A PARTICULAR PURPOSE.